Project Name: Phase 1- Evaluate JDE Purchasing Module **BP State:** Current

Business Process: Purchasing – Fulfilling a requisition

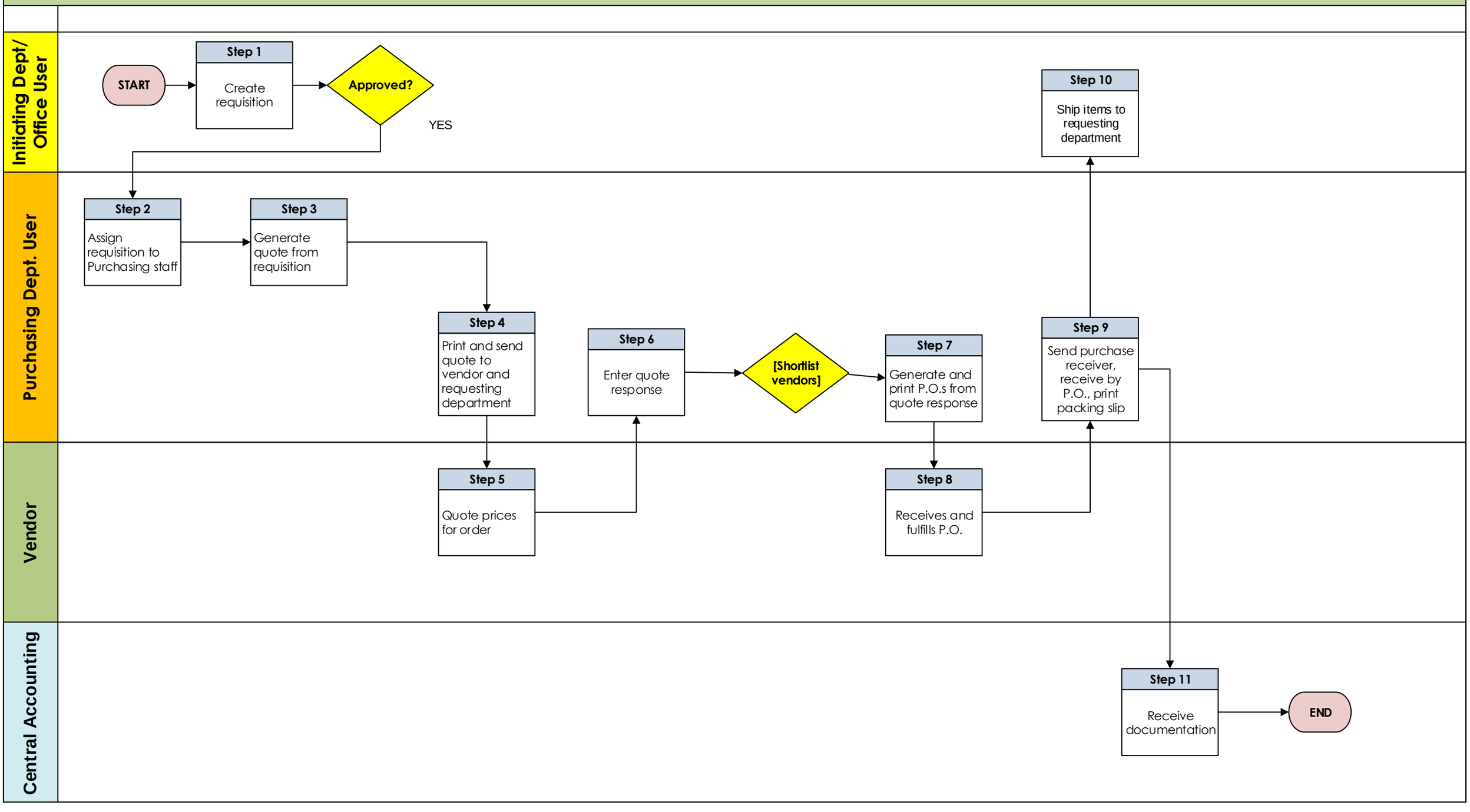

Project Name: Phase 1- Evaluate JDE Purchasing Module **BP State:** Current

Business Process: Purchasing – Fulfilling a requisition (Central Store Merchandise)

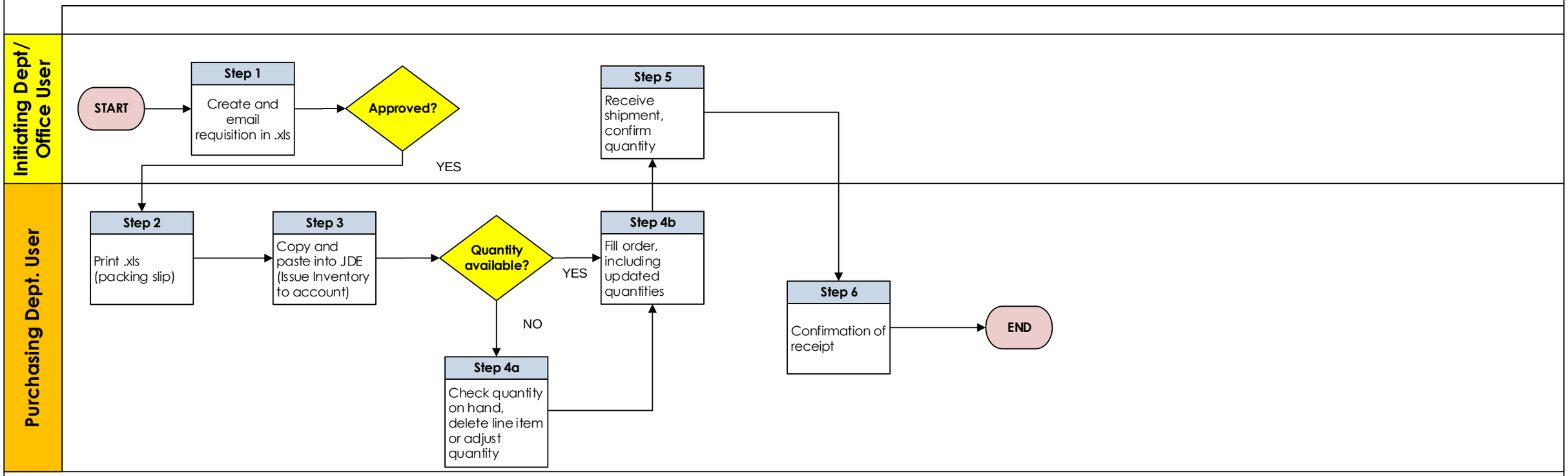

Project Name: Phase 1- Evaluate JDE Purchasing Module **BP State:** Current

Business Process: Purchasing – Fulfilling a blanket order

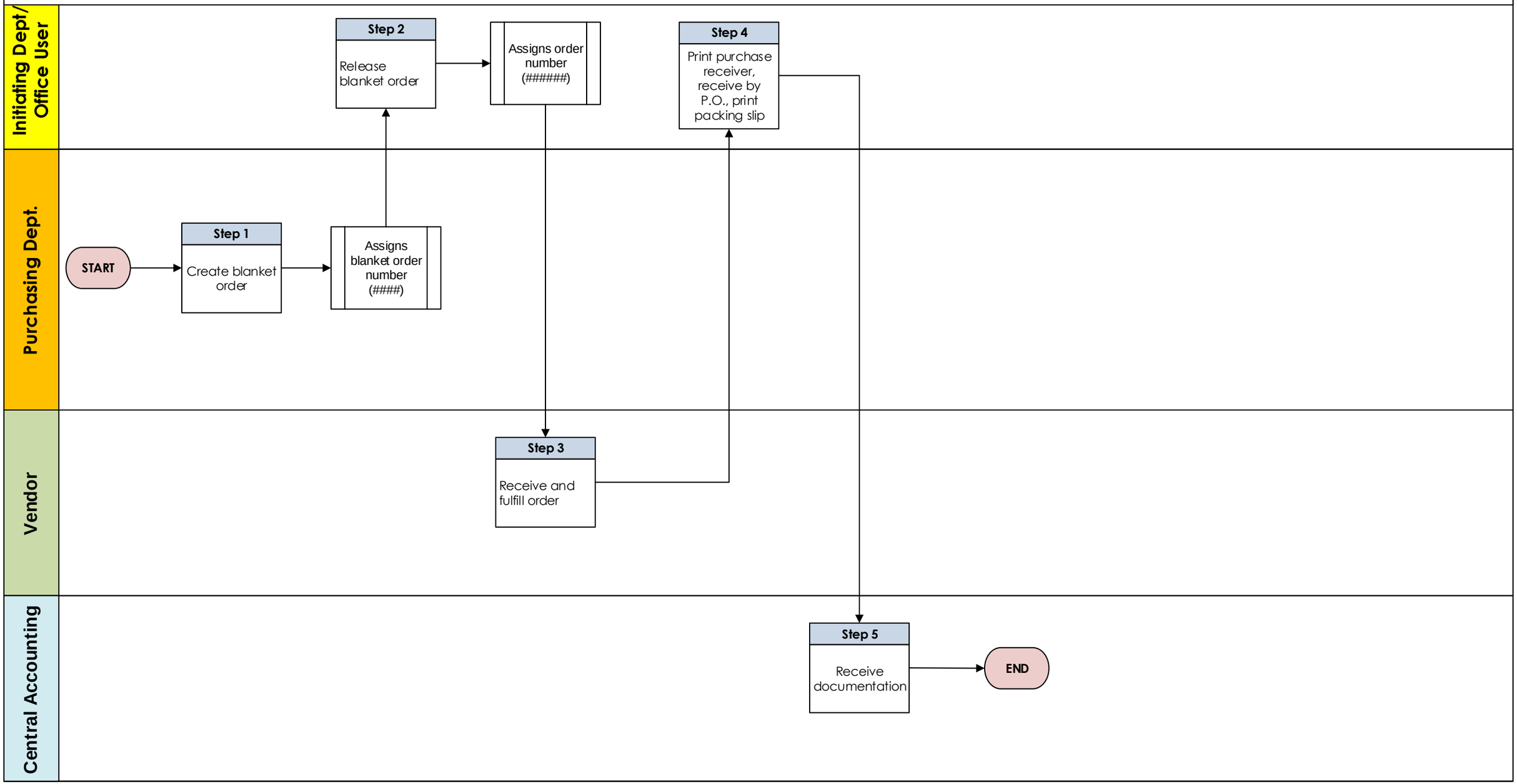

Project Name: Phase 1- Evaluate JDE Purchasing Module **BP State:** Current

Business Process: General Services – Pick Purchasing Process

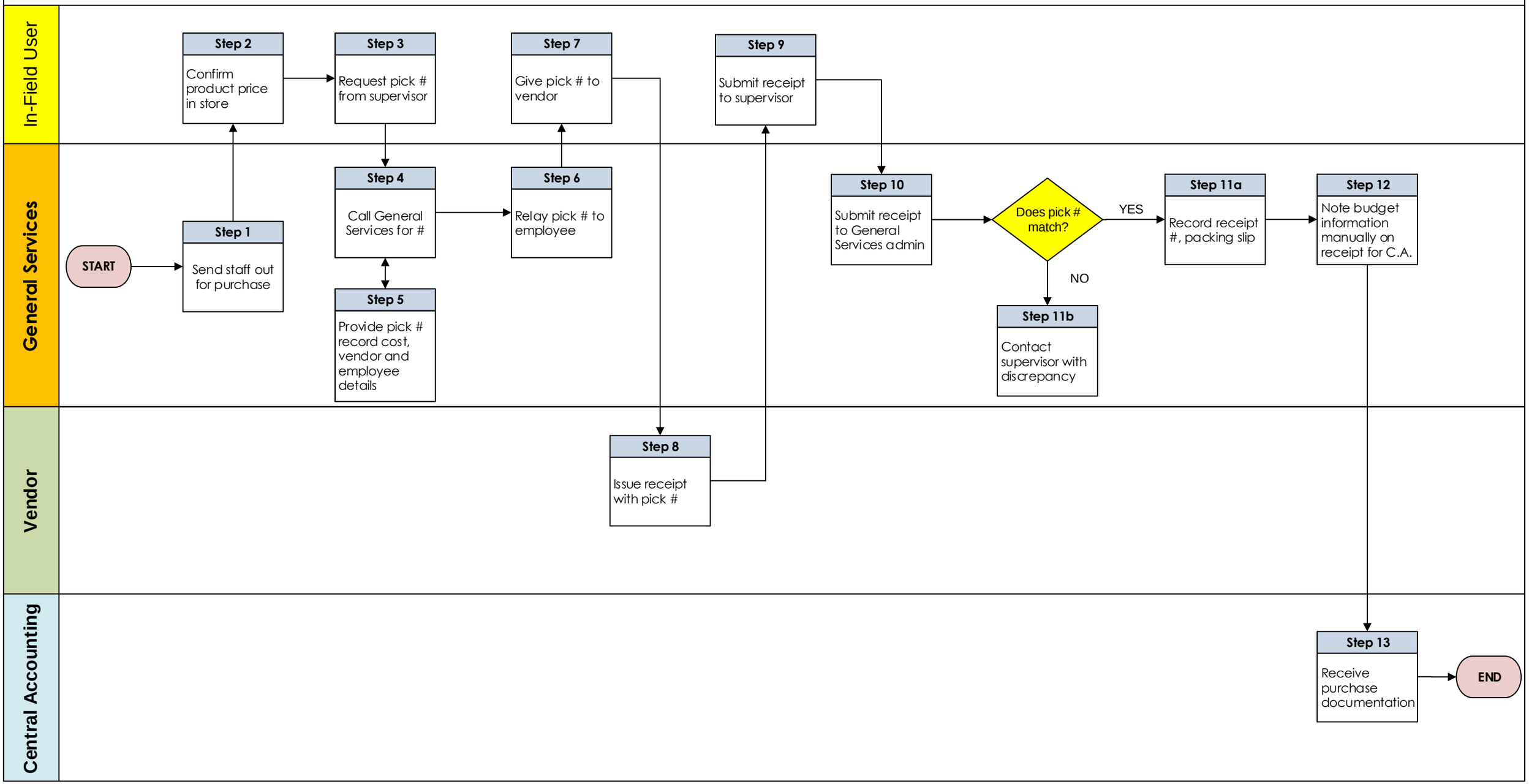

Version 1.0

Last Revision 09/06/2013