Standard Operation Procedures for Discrete PM2.5 and PM10 Using the Partisol 2025B

In Use By

Polk County Air Quality
Ambient Air Monitoring Personnel

For Calendar Year 2014

Revised: March 5, 2014

Section: 5
Revision: 11

PREPARED BY

Polk County Air Quality Air Pollution Monitoring Specialist — *Date* 3/5/14

SIGNATURES/APPROVALS

Brent Blanchard

Polk County Air Quality Assurance Officer — *Date* 3/13/2014

Table of Contents

Page #

5.1 Purpose....3
5.2 Scope....3
5.3 References....3
5.4 Introduction....3
5.5 Sampler Set-up....5
5.5.1 Inspecting New Equipment....5
5.5.2 Setup of New Equipment....6
5.5.3 Programming the Sampler....7
5.5.3.1 Program Setup Screen....7
5.5.3.2 Program System Setup Screen....8
5.5.3.3 Program Site IDs....9
5.6 Standards....9
5.6.1 Transfer Standards....9
5.6.2 Audit Standards....10
5.6.3 Qualification, Certification and Recertification....10
5.7 Quality Control....10
5.7.1 Station Inspection....10
5.7.2 Station Log Book....10
5.8 Equipment, Maintenance and Trouble Isolation....11
5.8.1 The Monitoring Station....11
5.8.2 Preventative Maintenance....11
5.8.2.1 Testing and Exchanging Batteries....11
5.8.2.2 Cleaning Air Intake Filters....12
5.8.2.3 Inspect "V" Seals....12
5.8.2.4 Pump....13
5.8.2.5 Software Update....13
5.8.3 Trouble Isolation....13
5.9 Quality Assurance (Accuracy –Audits)....13
5.10 Data Quality Assessment....14
5.10.1 Precision....14
5.10.2 Accuracy....14
5.10.3 Data Completeness....14
5.11 Calibrations....15
5.11.1 Temperature Calibration....15
5.11.1.1 Calibration of Ambient and Filter Temperature Sensors....15
5.11.1.2 Calibration of Filter Compartment Temperature Sensor....16
5.11.1.3 Calculations....16
5.11.2 Pressure Calibration....17
5.11.2.1 Calibration Procedures....17
5.11.2.2 Calculations....17
5.11.3 Flow Calibration....17
5.11.3.1 Calibration Procedures....17
5.11.3.2 Calculations....19
5.12 Sampler Operations....19
5.12.1 Quality Control....19
5.12.1.1 Ambient, Filter, and Filter Compartment Temperatures....19
5.12.1.2 Ambient Pressure....19
5.12.1.3 External Leak Check....19
5.12.1.4 Internal Leak Check....20
5.12.1.5 Flow Rate....20
5.12.1.6 Maintenance....20
5.12.2 Procedures....21

5.12.3 Maintenance of the Very Sharp Cut Cyclone (VSCC) 22
5.12.4 Pre-Sampling Verification 22
5.12.4.1 Temperature, Pressure and Flow Verifications 24
5.12.4.2 Maintenance of the Top Acceleration Assembly 25
5.12.4.3 Maintenance of the Lower Collector Assembly 25
5.12.4.4 Reassemble and Reinstallation of Inlet 26
5.12.5 Programming the Sampler 26
5.12.6 Post-Sampling Verification and Data Retrieval 27
5.12.7 Analog I/O Calibration 27
5.12.7.1 Quality Control 27
5.12.7.2 Calibration Procedures 28
5.13 Validation and Reporting of Data 28
5.13.1 Calculation Validation 28
5.13.2 Final Data Validation 28
5.13.3 Data Reporting 28

FIGURES

Figure 5-1: Very Sharp Cut Cyclone (VSCC) used for PM2.5 Sampling 4
Figure 5-2: Exploded Cross-Sectional View of Inlet Head Common to Both PM2.5 and PM10 Samplers 5
Figure 5-3: Set-up Screen 8
Figure 5-4: System Setup Screen 9
Figure 5-5: Schematic Drawing of the Air Flow Through a Very Sharp Cut Cyclone 23

TABLES

Table 5-1: Audit Activities and Acceptance Criteria 14
Table 5-2: Calibration, Verification, and Maintenance Check Intervals 21

Appendix A-Critical Forms and Field Sheets 29

5.0 STANDARD OPERATING PROCEDURE FOR DISCRETE PM2.5 and PM10 MONITORING USING THE THERMO SCIENTIFIC 2025 SEQUENTIAL AIR SAMPLER

5.1 Purpose

To establish a standard operating procedure (SOP) for Polk County Ambient Air Quality personnel to ensure proper set-up and installation of the Thermo Scientific Model 2025 Sequential Air Sampler.

5.2 Scope

These procedures are to be used by Polk County Air Quality Division personnel. The objective of this SOP is to familiarize the station operator with procedures used in the collection of air monitoring data. The accuracy of data obtained from any instrument depends upon the instrument's performance and the operator's skill. It is important that the station operator become familiar with both this SOP as well as the manufacturer's instruction manual in order to achieve a high level of data quality. This SOP is to be used as an outline and is not intended to replace the equipment manufacturer's manual or procedures.

5.3 References

5.3.1 Partisol®-Plus Model 2025 Operating Manual Sequential Air Sampler Revision B, Thermo Scientific, November, 2006.

5.3.2 Partisol®-Plus Model 2025 Service Manual Model 2025 Sequential Air Sampler Revision B, Thermo Scientific, May, 2004.

5.3.3 Partisol®-Plus Model 2025 PM-2.5 Air Sampler Quick Start Guide. Thermo Scientific, Revision A.004, October 9, 2008.

5.3.4 Partisol®-Plus Model 2025 PM-10 Air Sampler Quick Start Guide. Thermo Scientific, Revision A.001, October 9, 2008.

5.3.5 Test and Acceptance Guide, Partisol-Plus Model 2025 Sequential Air Sampler Revision A, Rupprecht & Patashnick Co., June 1998.

5.3.6 40 Code of Federal Regulations (CFR) Part 50, Appendix L, Reference Method for the Determination of Particulate Matter as PM2.5 in the Atmosphere.

5.3.7 40 Code of Federal Regulations (CFR) Part 50, Appendix M, Reference Method for the Determination of Particulate Matter as PM10 in the Atmosphere.

5.3.8 40 Code of Federal Regulations (CFR) Part 58, Appendix A, Quality Assurance Requirements for State and Local Air Monitoring Stations (SLAMS).

5.3.9 Quality Assurance Guidance Document 2.12, Monitoring PM2.5 in Ambient Air Using Designated Reference or Class I Equivalent Methods, USEPA, Nov. 1998 (http://www.epa.gov/ttn/amtic/pmqainf.html).

5.3.10 PM2.5 Mass Validation Criteria, March 30, 1999. (http://www.epa.gov/ttn/amtic/pmqainf.html).

5.3.11 Quality Assurance Handbook for Air Pollution Measurement Systems, Volume II, May 2013 edition, Appendix D

5.4 Introduction

This document describes the procedures used to sample PM2.5 and PM10 particulate matter by the Polk County Air Quality Program. PM2.5 has an aerodynamic diameter of 2.5 micrometers or less, while PM10 has an aerodynamic diameter of 10 micrometers of less.

For PM2.5 sampling, a Partisol®–Plus Model 2025 Sequential Air Sampler draws a known volume of ambient air at a constant flow rate through a PM10 size-selective inlet followed by a Very Sharp Cut Cyclone (VSCC) particle size separator. Figure 5-1 displays the VSCC which removes particles in the 2.5 to 10 micrometer range. Particles in the PM2.5 size range are then collected on a Teflon® filter during a specified 24-hour sampling period. Each sample filter is weighed before and after sampling to determine the net weight (mass) gain of the collected PM2.5 sample. This mass concentration is reported as micrograms per cubic meter at local conditions. The reference method for PM2.5 sampling is given in the Code of Federal Regulations (40 CFR 50, Appendix L). This document is intended to be used together with the sampler-specific information and instructions provided by the manufacturer of the PM2.5 sampler in the sampler's operation or instruction manual.

For PM10 sampling, a Partisol®–Plus Model 2025 Sequential Air Sampler can also be used. The Very Sharp Cut Cyclone is removed and replace with a pass through adapter tube. Particles in the PM10 size range are then collected on a Teflon® filter during a specified 24-hour sampling period. Each sample filter is weighed before and after sampling to determine the net weight (mass) gain of the collected PM10 sample. This mass concentration is reported as micrograms per cubic meter at standard conditions (25°C and 760 mmHg). The two different configurations of Set Temp/Flow Screens are shown later in this SOP to reflect the difference between reporting PM2.5 at local conditions and PM10 at EPA standard conditions (Section 5.6.2.2). The reference method for PM10 sampling is given in the Code of Federal Regulations (40 CFR 50, Appendix M).

Figure 5-2 is a schematic drawing showing the inlet head of the PM2.5 and PM10 samplers. The inlet is designed to remove particles with aerodynamic diameter greater than 10 μm and to send the remaining smaller particles to the next stage. The design flow rate through the inlet is 16.7 liters per minute.

Figure 5-1: Very Sharp Cut Cyclone (VSCC) Used for PM2.5 Sampling

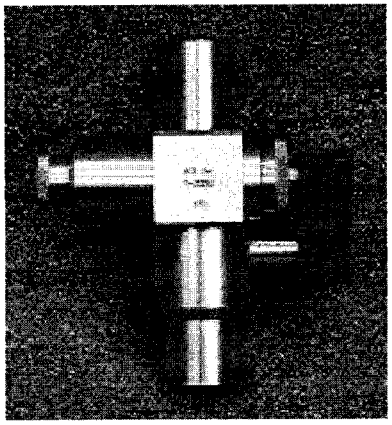

Figure 5-2: Exploded Cross-Sectional View of Inlet Head Common to Both PM2.5 and PM10 Samplers

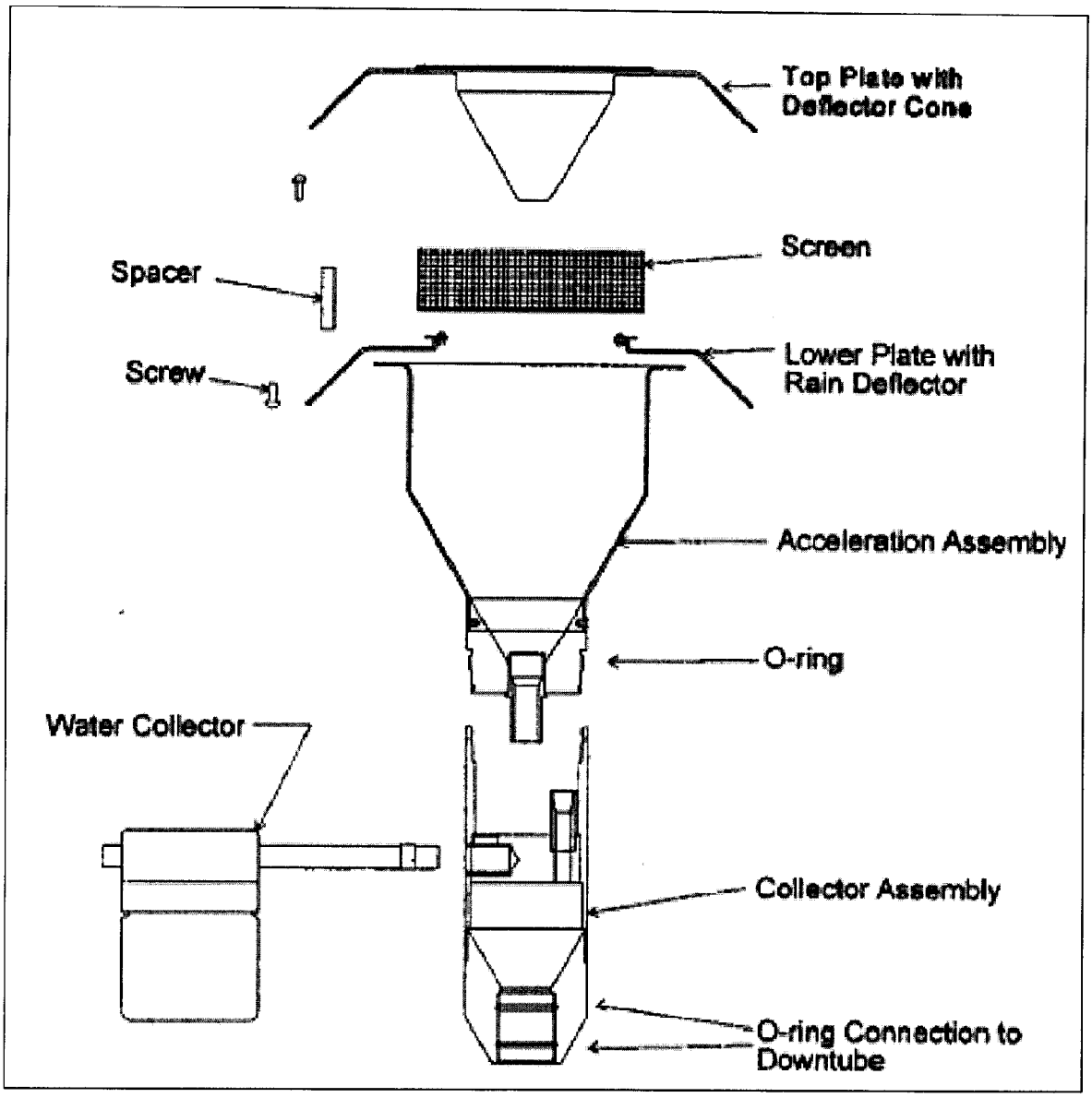

5.5 Sampler Set-Up

5.5.1 Inspecting New Equipment

When shipment of the sampler is received, verify that the package contents are complete as ordered. Inspect the instrument for external physical damage due to shipping, such as scratched or dented panel surfaces and broken knobs or connectors.

Remove the instrument cover and all interior foam packing and save (in case future shipments of the instrumentation are needed). Make note of how the foam packing was installed.

Inspect the interior of the instrument for damage, such as broken components or loose circuit boards. Make sure that all of the circuit boards are completely secured. (Loose boards could short out the motherboard). If no damage is evident, the monitor is ready for calibration, installation and operation. If any damage due to shipping is observed contact Thermo Scientific at 1-866-282-0430 for instructions on how to proceed.

If you discover that the instrument was damaged during shipping and it becomes necessary to return it to the manufacturer, repack it in the same way it was delivered.

5.5.2 Setup of New Equipment

The sampler should arrive in two parcels. A large rectangular box contains the sampler and its accessories. A cylindrical tube contains the stand. A flat blade screwdriver, a #2 Phillips screw driver and a 7/16" wrench are necessary for assembly. Materials needed for other aspects of the setup are listed in the relevant SOP document.

Begin a logbook or logbook section for the sampler.

Unpack the sampler and check the components against the list above and the packing list enclosed with the sampler. Record the sampler serial number in the logbook.

Cut any tie wraps and remove any transport restraints from inside the sampler enclosure. Assemble the Partisol® Stand and mount the sampler enclosure on the stand with the hardware provided.

Install the large rain hood on the right side of the enclosure. The rain hood should cover both air filters:

- Peel back the paper facing of the larger gasket and apply it to the larger rain hood.
- Place the large rain hood with its gasket attached on the enclosure.
- Secure the rain hood to the unit using four (4) #10-32 x ½" slot bind head screws.
- Install the two small rain hoods. Both rain hoods are installed on the back panel of the enclosure.
- Peel back the paper facing of one of the smaller gaskets and apply it to one of the smaller rain hoods.
- Place the small rain hood with its gasket attached on the enclosure.
- Secure the rain hood to the unit using four (4) #10-32 x ½" slot bind head screws.
- Repeat this procedure for the other small rain hood.

Install the sample tube and 1st stage inlet:

- Insert the end of the sampler tube with the 5cm (2 inch) machined section into the bulkhead of the sampler. Ensure that the tube is pushed into the enclosure through the final O-ring unit it hits a stop.
- Turn the dome connector on the bulkhead to ensure a tight grip.
- Place the 1st stage inlet on the end with 3 cm (1.25 inch) of machining. Ensure that the tube is pushed past the inlet's two O-rings, which provide some resistance, and hits a stop.

Install the ambient temperature sensor:

- Locate the two screws installed on the left side of the enclosure.
- Remove the two screws, being careful not to lose the washers. This will expose two holes.
- Locate the ambient temperature probe assembly in the compilation package.
- Place the ambient temperature probe assembly over the two holes in the left side of the sampler enclosure.
- Secure the assembly to the enclosure using the screws and washers previously removed. Place the washers between the ambient temperature bracket and the enclosure (not under the head of the screw) to prevent leakage of water into the electronics compartment.
- Plug the ambient temperature probe into the connector on the back panel of the sampler labeled "Ambient Temperature".

Loading and installing a cassette magazine:

- Load the supply magazine with assembled filter cassettes, so that the filters are facing the open end of the supply magazine.
- Install the loaded supply magazine (air connection facing the operator) in the left side of the sampler.
- Attach the air pressure supply tube at the base of the supply cassette magazine.
- Install the empty supply magazine in the right side of the sampler.
- Connect the unit to the electric supply.

For more detailed information concerning setup of the 2025, refer to Partisol®-Plus model 2025 PM-2.5 Air Sampler Quick Start Guide and Partisol®-Plus model 2025 PM-10 Air Sampler Quick Start Guide.

5.5.3 Programming the Sampler

5.5.3.1 Program Setup Screen

Figure 5-3 displays the Setup Screen. From the home screen, press <F5:Setup>. The defaults are set as follows:

Sample Definition Method:	BASIC
Sample Start Time:	00:00
Sample Duration:	024:00
Sample Repeat Time:	024:00 (daily sampling)
	072:00 (1 in 3 sampling)
	144:00 (1 in 6 sampling)
Filter Type	<BLANK>
Sample Flow Rate	16.7
Flow Error Mode:	ERR
Separators:	No

Figure 5-3: Setup Screen

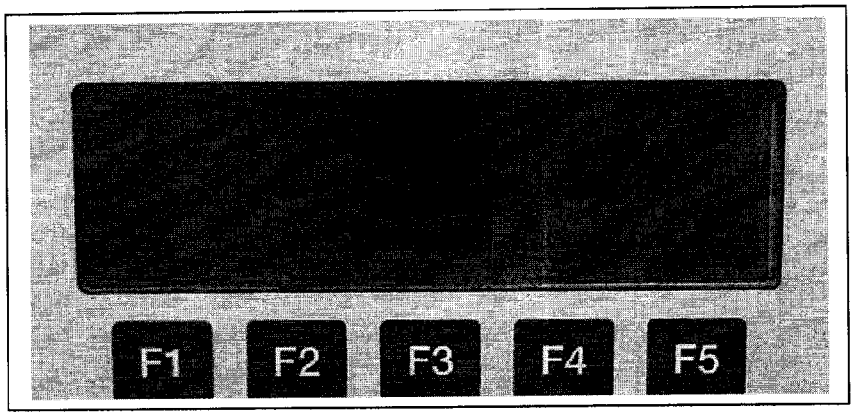

5.5.3.2 Program System Setup Screen

On the Setup screen as shown in Figure 5-3 above, press <F5:System> to enter the system set-up screen. Figure 5-4 shows the System Setup Screen. Confirm the sampler is set to the correct time and date. If not, press <EDIT> and enter the correct date, and press <ENTER>.

For PM2.5, the monitor must be programmed to sample in local temperature and pressure. These are the default settings for the 2025 sampler. Ensure that each line is as follows:

Average Temp:	99 (*local conditions)	Standard Temp:	99
Average Pres:	999 (*local conditions)	Standard Pres:	999
Date Form:	yy/mm/dd	Average Time:	30
Time Form:	:	Filter Fan:	Auto
Current Time:	(set to current time)	Auto Run:	YES
Current Date:	(set to current date)		

For PM10, the monitor must be programmed to sample in standard temperature and pressure. Press <EDIT> and enter a standard temperature of 25 and a standard pressure of 760, and press <ENTER>. Ensure the each line is as follows:

Average Temp:	99 (*local conditions)	Standard Temp:	25
Average Pres:	999 (*local conditions)	Standard Pres:	760
Date Form:	yy/mm/dd	Average Time:	30
Time Form:	:	Filter Fan:	Auto
Current Time:	(set to current time)	Auto Run:	YES
Current Date:	(set to current date)		

Figure 5-4: System Setup Screen

```
        System Setup
Average Temp: 99      Standard Temp: 99
Average Pres: 999     Standard Pres: 999
Date Form: YY/MM/DD   Average Time: 30
Time Form:        :     Filter Fan: ON
Curr Time: 05:00:00       Auto Run: ON
Curr Date: 98/04/10
```

Help	I/O	Site ID	Passwd	SysInfo	
Function Keys in Browse Mode					
Help	I/O	Site ID	Passwd	SysInfo	
Function Keys in Edit Mode					
-List	+List	Bksp	ChSign		

5.5.3.3 Program Site IDs

Confirm that the site ID is correct by pressing <F3:SiteID>, edit and enter the ID if necessary. ID1 will identify the sample location. It should be a continuous 9-digit AIRS code of state (19), county (153) and 4-digit site code (i.e. 191530030). ID2 will identify the monitor in use. It should be a 5-digit serial number unique to that monitor followed by the pollutant being sampled (i.e. 12345 PM10). Press <ESC> to return to the main menu. The sampler is now configured to perform sampling activities.

5.6 Standards

5.6.1 Transfer Standards

Transfer standards are used to calibrate the station "field" samplers and to perform verifications. Instruments designated as transfer standards are used so the primary standard can remain at a fixed laboratory location where conditions can be carefully controlled and damage to the instrument minimized. Transfer standards are calibrated against the higher-level, primary standards. All transfer standards must be accompanied by the following:

- The manufacturer's manuals for the instruments
- A logbook including a complete chronological record of all certification and recertification data as well as all PM2.5 and PM10 sampler calibrations carried out with the transfer standard
- A complete listing and description of all equipment, materials, and supplies necessary or incidental to the use of the transfer standard
- A complete and detailed operational procedure for using the transfer standard, including all operational steps, specifications and quality control checks

5.6.2 Audit Standards

Audit standards are used to challenge the station "field" sampler and to perform accuracy checks on a quarterly basis. Audit standards are calibrated against the higher-level, primary standards. All audit standards must be accompanied by the following:

- The manufacturer's manuals for the instruments
- A logbook including a complete chronological record of all certification and recertification data as well as all PM2.5 and PM10 sampler audits carried out with the audit standard
- A complete listing and description of all equipment, materials, and supplies necessary or incidental to the use of the audit standard
- A complete and detailed operational procedure for using the audit standard, including all operational steps, specifications and quality control checks

5.6.3 Qualification, Certification and Recertification

Qualification consists of demonstrating that the transfer and audit standards are sufficiently stable (repeatable) to be useful as a transfer standard. Repeatability is necessary over a range of variables such as temperature, line voltage, barometric pressure, elapsed time, operator adjustments, or other conditions, any of which may be encountered during use of the transfer standard. After a transfer and audit standard has been shown to meet the qualification requirements, certification is required before it can be used.

5.7 Quality Control

5.7.1 Station Inspection

Before entering the station, the perimeter should be inspected for damage. Extreme weather conditions, neglect of station maintenance or vandalism that may have resulted in damage to the site since the operator's last visit.

Once the operator has approached the site, she/he should first:

- Check for any obvious sampler malfunctions. For example, check to see that the equipment is running, the pumps are operating and the instrument is cycling properly.
- Note any unusual odors or noise. An unusual odor may indicate a point source of a pollutant or a strange new noise can indicate a malfunction in the equipment. These observations should be recorded in the station log book and may prove to be invaluable if the data is challenged.

The station operator is responsible for making several observations during the station inspection. Any of the above described observation must be thoroughly detailed in the site log book.

5.7.2 Station Log Book

A station log book must be maintained at each monitoring site and should accurately reflect site operations. The log book will be identified with the station name, station number, date, time, operator, instrument identification, parameter, scale and units. All entries shall include the date, time, maintenance on equipment, and equipment changes. Additional information should include: maintenance performed on the station, abnormal traffic patterns, or nearby construction.

Should the data be challenged, the information recorded in the log book is invaluable. A written record of observations concerning abnormal operations or localized occurrences is critical if a violation of ambient air standards were recorded during this period. Completed log books should be maintained by Polk County Air Quality and will be archived for future reference.

5.8 Equipment, Maintenance and Trouble Isolation

There are several routine duties that must be performed each time an air monitoring station is inspected. These duties include equipment inspection, performing calibrations, assisting during audits, documentation, and making necessary adjustments or repairs to the instruments.

5.8.1 The Monitoring Shelter

It is the operator's responsibility to maintain the monitoring station. Routine maintenance includes keeping site clean and being observant of potential problems. Examples of potential problems include:

- Accumulation of dirt and debris
- Infestation by rodents or insects
- Overgrowth of vegetation around the site

5.8.2 Preventative Maintenance

Each instrument must be periodically examined and serviced to anticipate and prevent instrument failure. Scheduled maintenance on the instruments will prevent costly repairs and loss of data. The routine maintenance required on the samplers by the station operator is minimal and is outlined in the manufacturer's manual. By keeping track of the instruments' responses from week to week, trends can be observed which would alert the operator of a potential problem, and to correct the situation before the instrument fails. Some minor but critical maintenance procedures are as follows:

5.8.2.1 Testing and Exchanging Batteries

The three alkaline AA batteries in the electronics provide backup power for internal data storage and the clock/calendar. The expected lifetime of the batteries in the instrument is one year. Section 3.1.2 in the Service Manual Partisol® - Plus Model 2025 Sequential Air Sampler Revision B, Thermo Scientific, May, 2004.

Follow these steps to ascertain if the batteries need replacing, and to exchange if necessary. Remove the three screws securing the Pump Compartment Cover, slide the cover up and remove. Open the electronics compartment of the sampling unit and locate the batteries. Check whether the batteries need replacing by measuring the voltage across the test point labeled "BATT" (red) on the interface board and the ground test point labeled "188_PGND". If the measured voltage is less than 4.2 VDC, the batteries need replacing.

Remove the clip that holds batteries in their mounting and pull the old batteries out and replace them with 3 new ones, noting the proper polarity. Perform this exchange within an elapsed time of five minutes to avoid the loss of data stored in the battery-backed RAM. Reinstall the clips to hold the batteries in position. Retest for a voltage of 4.2 VDC. Close the electronics compartment of the sampling unit.

5.8.2.2 Cleaning Air Intake Filters

The two filters – one in the filter compartment and one in the pump compartment, should be cleaned at least every six months and more frequently in highly contaminated areas. It is Polk County's procedure to clean both filters monthly, during verifications. Section 3.1.4 in the Service Manual Partisol® - Plus Model 2025 Sequential Air Sampler Revision B, Thermo Scientific, May, 2004.

Locate the two air-intake fans. Each of these has an associated air intake filter. Snap off the covers enclosing the air intake filters. Take out the filters and clean them with a brush or wash them with a mild soap solution and water. If the filters were washed in the liquid solution, shake the filters and allow them to dry. Reinstall the filters in their holders and remount the covers.

5.8.2.3 Inspect "V" Seals

The "V" seals should be inspected and replaced if necessary at least once every three months. Section 3.1.5 in the Service Manual Partisol® - Plus Model 2025 Sequential Air Sampler Revision B, Thermo Scientific, May, 2004.

Ensure the instrument is in the STOP mode and enter Service Mode. Set the pointer to "Manual Motion Tests" on the Service Menu and press <F4:FiltChg> to go to the Filter Exchange Screen. On the filter Exchange Screen, turn on the pump (labeled Pump), turn on the pressure vent valve (labeled "Pressure") and turn on the lift/push valve (labeled "Lift Push"). This will cause the lift/push cylinder (the middle cylinder on the filter exchange assembly) to retract and will help ease disassembly. Unlatch and open the top cover of the Partisol®-Plus Sampler with the down tube and first-stage inlet end attached. Lift the down tube out of the upper part of the sampler enclosure and locate the down tube mount on the top cover. While supporting the ring on the underside of the top cover, remove the four screws that secure the down tube mount to the top cover. Remove the down tube mount and ring. Locate the down tube mount "V" seal. Examine seal for drying and/or cracking. Replace, if necessary. Replace the down tube mount and ring onto the top cover ensuring that the side of the ring with the chamber is facing down.

Locate the top head mounting plate. Remove the 4 thumbscrews that secure the top head mounting plate to the filter exchange assembly. Lift the plate and remove from the enclosure. Locate the two "V" Seals now exposed. The top seal is located in the top head. The bottom seal is located in the now exposed section of the filter exchange assembly. Examine both seals for drying/cracking. Replace, if necessary. Locate the exit cylinder. Remove the three screws that secure the exit cylinder base to the filter exchange assembly. Remove assembly from enclosure. Locate the exit cylinder "V" seal and examine the seal for drying/cracking. Replace, if necessary.

Place the exit cylinder base in its' proper position on the filter exchange assemble and secure using the three screws. Replace the top head mounting plate and secure using the four thumbscrews. Replace the down tube and close the top cover. On the Filter Exchange Screen, turn off the lift/push valve (labeled "LiftPush", turn off the pressure vent valve (labeled "Pressure") and turn off the pump (labeled "Pump).

Perform an external leak test and an internal leak test according to the procedure outlined in this manual. Resume normal operation.

5.8.2.4 Pump

It is recommended that pumps be rebuilt or replaced in all site samplers annually, whether necessary or not. The pump should maintain a minimum pressure of 40 psi (46-48 psi is preferred). Ideally, pumps will be serviced in the fall, so they will operate at maximum efficiency throughout the winter. Pumps may be rebuilt, but should be replaced after several rebuilds. Wipe down the interior of the sampler's case to remove bugs, dirt, and/or water deposits that may have collected inside the case. This may be required more frequently during summer months. Inspect the cooling air intake filter during the summer months and clean if necessary.

5.8.2.5 Software Update

The operator must update software to the latest version of software as they become available from the manufacturer.

5.8.3Trouble Isolation

The instruments in Polk County Air Quality's air monitoring network are very reliable. However, after a period of continuous use problems may occur. Leaks in the system, dirt build up and pump failure are typical. After time, the operator should be able to quickly distinguish the symptoms and causes of equipment failure.

It is suggested that each station operator consult the **Thermo Scientific Partisol®-Plus 2025 Operators Manual and Service Manual** and compile personal notes on troubleshooting as they gain experience with the instruments. The operator is encouraged to contact the manufacturer when attempting any repairs.

The Operator's manual is the best resource the station operator has for the information on the operation and maintenance of the PM2.5 and PM10 samplers.

5.9 Quality Assurance (Accuracy - Audits)

Each of the operating PM2.5 and PM10 samplers will be audited once during each calendar quarter by the designated Quality Assurance Officer utilizing the procedures and calculations specified in 40 CFR 58, Appendix A, "Quality Assurance Requirements for State and Local Air Monitoring Stations (SLAMS)."

Perform audits as described by procedures outlined in Section 5.12.4.1, Temperature, Pressure and Flow Verifications, of this SOP. Table 5-2 below outlines the activities to be audited and their acceptable criteria. All steps are to be recorded on the "Audit Field Sheets" Forms 1 & 2, Appendix A.

Audits should be conducted in the same way as the routine verifications performed once every four weeks, with the following exceptions:

- Audits must be done using standards that are not used for routine calibrations and checks, and should be done by someone other than the routine operator. For example, a special FTS and filters are used for flow audits.

- Acceptance criteria for audits are given in the Operational Evaluations section of the Redbook MQO tables, however data should not be invalidated based on the results of an audit alone. An investigation initiated by the audit results may lead to the invalidation of data.

- Flow audit results are uploaded to AQS. The flows that are uploaded to AQS are observed with the FTS and its adapter in place. The actual flow is obtained from the audit standard. The indicated flow corresponds to the samplers own internal flow measurement device.

Table 5-1 Audit Activities and Acceptance Criteria

Activity	Acceptance Criteria
One Point Flow Rate Audit	± 4% of Standard ± 5% of Design flow rate
Temperature audit (single point: ambient air inlet sensor, filter compartment, and filter temperature sensor)	± 2°C of Standard for the ambient and filter temperature sensors and ±4° of Standard for filter compartment sensor
Pressure Audit	± 10 mm Hg
External Leak Audit	< 25 mmHg
Internal Leak Audit	< 140 mmHg

5.10 Data Quality Assessment

For each calendar quarter and year, Polk County Air Quality will prepare data precision, accuracy and completeness reports for the Iowa Department of Natural Resources (Iowa DNR) and EPA-Region 7 in accordance with the current Letter of Agreement (LOA).

5.10.1 Precision

The precision for PM2.5 and PM10 will be evaluated and reported employing the frequencies, procedures and calculations outlined in the Code of Federal Regulations and current EPA guidance documents.

5.10.2 Accuracy

The accuracy will be evaluated and reported for PM2.5 and PM10 using results from the performance audits and the calculations specified in the Code of Federal Regulations and current EPA guidance documents.

5.10.3 Data Completeness

The completeness of the data will be determined for each monitoring instrument and expressed as a percentage. Percent valid data will be a gauge of the amount of valid data obtained from the monitoring instrument, compared to the amount expected under ideal conditions, or which were discontinued prior to the end of any reporting period for calculation purposes.

5.11 Calibrations

5.11.1 Temperature Calibration

Calibration of the temperature sensors is to be performed upon installation, annually, when monthly verifications or quarterly audits fail to meet acceptance criteria with respect to the actual temperature as determined by a NIST traceable thermometer. The NIST thermometer must be recertified annually.

5.11.1.1 Calibration of Ambient and Filter Temperature Sensors

The temperature sensors are removed from their mounting position and placed in a constant temperature bath with a standard thermometer. The readings are compared and the sampler readings are adjusted accordingly. The following materials will be required:

- NIST traceable thermometer
- 3 vacuum bottles with lids
- Distilled water ice, crushed
- Distilled water
- 1 each, #0 and #1 Phillips head screwdriver
- 1 each, 3/32" and 7/64" hex key

Prepare the thermal masses. Fill a vacuum bottle nearly full with crushed ice. Pour in water to cover the ice. Put the lid on. This will produce a temperature of 0.0°C ((±0.1°C) Cold). Fill another vacuum bottle with water that has been allowed to equilibrate to room temperature for several hours (Ambient). Heat some water, either on a hotplate or in a microwave oven, to about 40°C (Hot). Fill a third vacuum bottle with the heated water.

Perform a calibration of the ambient air and filter temperature sensors. If the sampler is not in stop mode, press <RUN/STOP> key and then <F2:Stop> to place the sampler in stop mode. Remove the ambient temperature probe from the housing by loosening the screws holding the probe. Remove the cover that is over the sampling platform. Loosen the two screws on either side of the probe and remove the temperature probe from the sampling platform. Loosen the screw on the positioning ring and slide it off the probe. Remove the probe from the filter compartment while leaving the cable connected to the sampler.

Press <MENU>, scroll to "Enter Service Mode" and press <ENTER> to enter the "Service Menu". With the cursor pointing to "Calibration/Audit", press <F3:SensCal> to enter the "Sensor Calibration Screen".

Immerse the NIST traceable temperature standard, the ambient and the filter temperature probes in the ambient bath. Allow the readings to equilibrate for 5 minutes. Take five readings about one minute apart. If the readings appear to have stabilized, average the five readings and apply the correction for the standard thermometer. Enter the corrected average temperature from the standard thermometer in the Actual column of the Amb Temp row of the ambient sensor calibration screen. Press <F4:FiltCal> to switch to the filter temperature calibration screen and enter the corrected average temperature reading

in the Actual column of the Filter 1 row. The ambient and filter temperature sensors have been calibrated.

NOTE: although Quality Assurance Document 2.12 (April, 1998) recommended a three point calibration of all temperature sensors, the 2025 software only allows for a one point calibration. Therefore, the 2025 samplers will be calibrated at one point, followed by a multiple point verification.

Place the ambient and filter temperature probes as well as the standard successively in the cold, ambient and hot baths. Take five readings of the standard thermometer and the filter/ambient temperature probes in each bath at 1-minute intervals. Average the readings for each of the devices. Apply the correction factor to the standard thermometer averages. Verify that the instrument sensors meet the ±2°C accuracy requirement.

Reinstall the sensors. Secure the positioning ring on the filter temperature probe in the same position as when it was removed to assure proper positioning of the sensor.

5.11.1.2 Calibration of the Filter Compartment Temperature Sensor

Perform a calibration of the filter compartment temperature sensor. It is not possible to remove the filter compartment temperature sensor so that it can be immersed in the thermal bath. Therefore, only a single point can be used in the calibration. Press <F4:FiltCal> to enter the Filter Temperature Calibration Screen. Determine the current temperature at location of the filter compartment probe in the ventilated filter compartment of the Partisol®-Plus Sampler using the temperature standard. Enter the corrected value from the temperature standard in the in the Actual column of the Filt Comp row of the filter temperature calibration screen. Verify that the filter compartment temperature meet the ±2°C accuracy requirement.

Press <ESC> to return to the service menu. Scroll to "Exit Service Mode" and press return. Then press <RUN/STOP> to return the sampler to its pre-calibration status.

All steps are to be recorded on an "Annual Calibration Sheet" Form 3, Appendix A.

5.11.1.3 Calculations

When the temperature standard is certified, a certificate is provided which gives corrections to the reading of the temperature standard ($T_{standard}$). These correction factors (Corr Fact) must be added to the reading to correct to the actual temperature (T_{actual}).

$$T_{actual} = T_{standard} + \text{Corr Fact}$$

For determining whether the calibration meets the accuracy requirements, calculate the difference between the corrected readings from temperature standard and the instrument sensors as:

$$\text{Difference} = T_{sampler} - T_{actual}$$

5.11.2 Pressure Calibration

Calibration of the pressure sensor is to be performed upon installation and then annually or when monthly verifications or audits indicate a deviation greater than ±10 inHg from the actual pressure as determined by an NIST traceable barometer. The NIST barometer must be recertified annually.

5.11.2.1Calibration Procedures

The ambient pressure reading of the sampler is compared to the ambient pressure reading of a NIST traceable barometer. The readings are compared and the sampler calibration offset is adjusted if necessary. The following materials will be required:

- PM10/PM2.5 Calibration/Multi-point verification sheet
- NIST traceable barometer (pressure standard).

Press <MENU> to enter the Service Menu. With the cursor pointing to "Calibration/Audit", press <F3: SensCal> to enter the Sensor Calibration Screen. Document the initial offset value on the Calibration/Multi-point Verification Sheet.

Determine the current ambient station pressure with the NIST traceable barometer in mmHg (absolute pressure, not corrected to sea level). Press <Edit> to enter the measured ambient pressure in the Actual column of the Amb Pres row of the Sensor Calibration Screen, press <Enter>. The sampler automatically adjusts the corresponding offset based upon this input. Document the final offset value on the PM10 Calibration Sheet.

5.11.2.2Calculations

To convert the any barometer readings from inHg to mmHg:

inHg x 25.4 = mmHg

5.11.3 Flow Calibration

Flow calibrations should be performed upon installation, annually, following a major electrical or mechanical maintenance, such as replacement of a circuit board or rebuilding of the sampling pump assembly, or when routine flow rate verifications or audits fail to meet the acceptance criteria.

For a three-point calibration of a 16.7 L/min flow rate set point, Thermo Scientific recommends the following parameter values.

Min. Flow: 15.0 L/min (10% below the usual 16.7 L/min set point)
Max Flow: 18.4 L/min (10% above the usual 16.7 L/min set point)

The flow of the sampler is compared to a NIST traceable flow calibration device. The readings are compared and the sampler calibration offset is adjusted if necessary.

5.11.3.1 Calibration Procedures

A 3-point flow calibration at flow rates of 15.0, 16.7, and 18.4 L/min is performed using a NIST traceable flow meter. The following materials will be required:

- NIST traceable flow transfer standard – Examples include: BIOS International, Dry Cal, DC-1 Flow Calibrator, or Streamline FTS from Chinook Engineering. **Note**: that regardless of what the settings are for Standard Temperature and Pressure in the System Set-Up Screen (Figure 5-3), the current flow displayed on the LCD screen of the sampler will be given at local conditions. Therefore, the FTS should be configured to display the flow in local conditions for PM2.5 and PM10 sampling.
- Flow Audit Adapter
- PM2.5/PM10 Calibration Sheet

Perform temperature and pressure calibrations and external leak check as described in sections 5.11.1 - 5.11.2 and 5.12.1.3 before executing the flow calibration procedure below.

Before beginning this procedure, an unused filter must be in place in the sampler. See Section 5.12.4 for instructions.

Press <MENU>, scroll down to "Service Mode" and press <Enter> to enter the Service Menu. With the cursor pointing to "Calibration/Audit", press <F5: FlowCal> to enter the Flow 1 Calibration Screen. Remove the 1st stage inlet from the external sample tube of the Partisol®-Plus Sampler. Install the Flow Audit Adapter with its valve open. Attach the flow measurement device (flow standard) to the Flow Audit Adapter. Allow the temperature of the standard to equilibrate to that of the sampler for 10 to 15 minutes. Press <Edit> and enter the desired minimum and maximum calibration flow rates (range), as well as the number of calibration point's desired (Num Points) in the Flow Calibration Screen, press <Enter>. Recommended values are: 15.0, 16.67, and 18.4 L/min.

During the calibration procedure, the sampler begins with the minimum flow rate (Min Flow), and increases the flow in equal intervals as "actual" values are entered until it reaches the maximum flow rate (Max Flow). Press <F9:Start> (<F5:More> followed by <F4:Start>) to initiate the flow calibration. Wait for the flow to stabilize at each flow rate plateau, then press <Edit> and enter the flow (inches H_2O) from the flow standard in the Act Flow Field. Press <Enter>. The sampler automatically proceeds to the next flow rate plateau. The sampler automatically adjusts the Offset and Span values in the Flow 1 Calibration Screen as the flow measurements are entered.

Following the flow calibration perform a one point flow verification (Section 5.12.1.5). If the flow verification differs by $\pm$ 2% the flow rate calibration must be redone.

Restore the sampling hardware to its original state by removing the flow metering hardware and reinstalling the inlet onto the external sample tube. Press <ESC> until the Service Menu is reached. Scroll to "Exit Service Mode" and press <ENTER>.

All steps are to be recorded on a "Annual Calibration Sheet" Form 3, Appendix A.

5.11 Sampler Operations

This section describes the routine field operations for the Thermo Scientific Model 2025 Sequential Air Sampler. Routine operations are defined as those performed on a monthly, or more frequent, basis.

5.12.1 Quality Control

5.12.1.1 Ambient, Filter, and Filter Compartment Temperatures

Sampler measured (current) temperature must be within ±2°C of the temperature measured by an external transfer standard for the ambient and filter temperature sensors. The filter compartment temperature sensor must be with ±4°C of the temperature measured by an external transfer standard. Failure to meet the acceptance criteria may result in the invalidation of samples back to the last successful temperature verification.

Perform temperature verifications at least once every 4 weeks or as needed. See section 12.1. in the Operating Manual Partisol® - Plus Model 2025 Sequential Air Sampler Revision B, Thermo Scientific, November, 2006.

5.12.1.2 Ambient Pressure

Current ambient pressure must be within ±10 mmHg of actual ambient pressure. Failure to meet this criteria may result in the invalidation of samples back to the last successful pressure verification.

Converting inHg to mmHg: inHg x 25.4 = mmHg

Perform ambient pressure verification at least once every 4 weeks or as needed. See section 12.1.3. in the Operating Manual Partisol® - Plus Model 2025 Sequential Air Sampler Revision B, Thermo Scientific, November, 2006.

5.12.1.3External Leak Check

For a sampler external leak check, a pressure drop of 25 mmHg or less is a passing check.

Perform external leak check at least once every 4 weeks or whenever the flow path is broken. See section 12.1.5. in the Operating Manual Partisol® - Plus Model 2025 Sequential Air Sampler Revision B, Thermo Scientific, November, 2006.

5.12.1.4 Internal Leak Check

For a sampler internal leak check, a pressure drop of 140 mmHg or less is a passing check.

Perform internal leak check at least once every 4 weeks or whenever the flow path is broken. See section 12.1.7. in the Operating Manual Partisol® - Plus Model 2025 Sequential Air Sampler Revision B, Thermo Scientific, November, 2006.

5.12.1.5 Flow Rate

A one-point flow verification is subjected to three checks. "Current" refers to the Samplers measured flow and "Actual" refers to the flow transfer standard (FTS):

- Percent difference from "Actual":
  [(Current-Actual)/Actual] x 100 < ±4%

- Percent difference from Set flow with FTS attached:

[Current - Set Flow (16.70)/Set Flow(16.70)] x 100 < ±5%

- Percent difference from Set flow with the 1st Stage inlet installed:
  [Current - Set Flow (16.70)/Set Flow (16.70)] x 100 < ±2%

Perform flow rate verification at least once every 4 weeks or as needed. See section 12.1.6. in the Operating Manual Partisol® - Plus Model 2025 Sequential Air Sampler Revision B, Thermo Scientific, November, 2006.

5.12.1.6 Maintenance

See Appendix G in the Operating Manual Partisol® - Plus Model 2025 Sequential Air Sampler Revision B, Thermo Scientific, November, 2006.

Table 5-2 summarizes the calibration, verification and maintenance frequencies.

Table 5-2 Calibration, Verification, and Maintenance Check Intervals

Activity	Frequency	Acceptance Criteria
Single point temperature verification of ambient air inlet sensor, filter compartment and filter temperature sensor	1/4 Weeks	± 2°C of Standard for ambient and filter temp. sensors and ±4°C of Standard for filter compartment sensor
Temperature Multi-pointVerification	After every calibration	± 2°C of Standard
Temperature Calibration	As needed or at least 1/year	Do multipoint verification immediately after calibration
Pressure Verification	1/4 Weeks	± 10 mmHg
Pressure Calibration	As needed or at least 1/year	± 10 mmHg
One-Point Flow verification	¼ Weeks and immediately following a calibration	± 4% of Standard ± 2% for the immediate post calibration flow verification ± 5% of Design Flow rate
Multi Point Flow Calibration	1/year or as needed	± 4% of Standard
External Leak Check	1/4 Weeks or as needed	25 mmHg/min
Internal Leak Check	1/4 Weeks or as needed	140 mmHg/min
Cleaning of VSCC	1/4 Weeks or as needed	
Disassemble, Inspect and Clean PM 10 Sample Inlet	Every 15 Sampling Events and at least Monthly	
Clean pass through tube	Every 15 Sampling Events and at least monthly	
Clean Interior of Sample Case	1/4 Weeks	
Water Collector Bottle Inspection	Every 5 Sampling Events	
Replace particle trap filter in bowl behind filter shuttle assembly	As Needed	Part # 33-000393

5.12.2 Procedures

New station operators will be provided with on-site training by an experienced operator before they operate a station on their own. The following procedures are intended to assist the operator in performing and documenting monitoring procedures. Monitoring personnel must become familiar with the Operating and Service Manuals for the Thermo Scientific 2025 Sequential Air Sampler.

Included are the steps involved in verifying sampler performance characteristics prior to starting a sampling run, programming a sampling run for midnight to midnight 24-hour sampling 1 day out of every 3 or 6 days, and retrieving data after a sampling run in the field has concluded. The following materials are required:

- Supply Magazine
- Clean, empty storage magazine
- 1 – Leak check cassette with impermeable disk
- 1 – Empty Cassette with no screen or filter
- 1 – External leak check cassette with 47mm Teflon filter
- 1 – VSCC for PM2.5 or pass through tube for PM10
- NIST traceable thermometer (temperature standard)
- NIST traceable barometer (pressure standard)
- NIST traceable flow meter (flow standard)
- Flow adapter
- Form with cassette ID #'s and magazine ID #'s
- Lap top computer with AKComm software installed for data acquisition and/or hand held palm
- 9 to 9 pin RS232 cable
- Sampling data sheet
- Transport container
- Ammonia based general purpose cleaner
- Cotton swabs
- Small soft bristle brush
- Paper towels
- Distilled water
- Silicone based stopcock grease
- Small screwdriver
- Small crescent wrench
- Pocket knife
- 37 mm glass fiber filter

5.12.3 Maintenance of the Very Sharp Cut Cyclone (VSCC)

Figure 5-5 is a schematic drawing showing the Very Sharp Cut Cyclone (VSCC). The VSCC is designed and manufactured by BGI Incorporated. Its intended use is as an equivalent fine particulate matter separator in place of the US EPA WINS Impactor for PM2.5 sampling in any commercial model of the U.S. EPA Federal Reference Method (FRM) Samplers. BGI developed the VSCC, and verified in laboratory and field, to have several operational advantages compared to the WINS, insofar as it is a dry separator and requires cleaning at infrequent intervals.

The intervals between cleaning of the VSCC should not exceed 30 days of 24-hour sampling. Recommended cleaning materials include mineral free water and lint free lab wipes.

To Disassemble a BGI VSCC: remove the VSCC from its installed position in the instrument. Pull off the side transfer tube. If it is too tight to remove by hand, pry it off with a rigid plastic lever. Care should be taken to not damage the two "O" ring seals. Remove the top cap and grit

pot by unscrewing. Wet a lint free wipe with water and remove all visible deposits. These are most likely to be found at the bottom of the cone and inside the grit pot. Inspect all "O" rings for shape and integrity. If at all suspect, replace. Lubricate all "O" rings with light grease. It is important to well lubricate the transfer tube to avoid difficult disassembly. Assemble in reverse order and reinstall. Perform a leak check according to manufacturers operating manual specifications.

5.12.4 Pre-Sampling Verification

At a minimum, perform verifications and leak checks at the frequency listed in the Quality Control Section 5.12.1 of this SOP.

NOTE: Verifications should be performed on a non-sampling day with the exception of those running on a daily basis. If disrupting a sampling event cannot be avoided, the active filter must be removed and protected from contamination and damage by storing it in a clean container between uses. Also, the active sampling period must not be interrupted for more then 1 hour in order to achieve a minimum overall sampling period of 23 hours.

Install a supply magazine with an internal leak check cassette (with impermeable disk), an external leak check cassette (with 47mm Teflon filter), and an empty cassette (with no screen or filter). The empty cassette should be in the topmost position, while the Teflon in 2nd and impermeable disk in 3rd position. Install the supply magazine in the left side of the sampler.

Figure 5-5: Schematic Drawing of the Air Flow through a Very Sharp Cut Cyclone

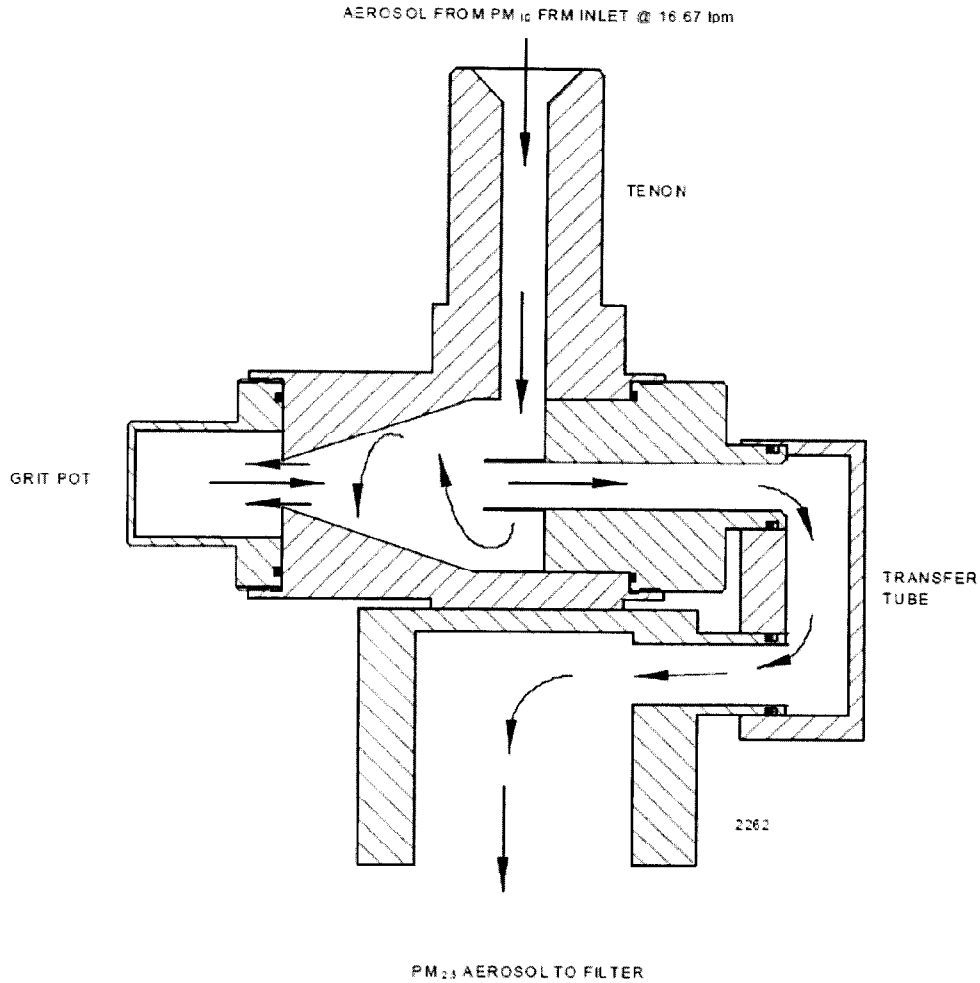

Maintenance and performance verification can be done in either the Stop or Wait or Sampling Modes. To verify performance in the Wait or Sampling Modes, press <RUN/STOP>, <F1:Audit> and then any key to continue. Press <F4:FiltAdv> and wait for the filter change to complete. Remove the right filter magazine with the exposed filters from the previous runs, cap the magazine and place in a cooled container for transport to the lab or weighing room. Install a clean empty storage magazine in the right side of the sampler. Unlatch and open the sampler's top cover.

5.12.4.1 Temperature, Pressure and Flow Verifications

Verify the sampler ambient temperature by measuring the temperature (°C) at the ambient temperature sensor using an external thermometer. Compare the actual temperature (°C) with the Amb Temp (current) displayed in the Audit Screen. If the

actual and current readings are not within ±2°C, perform the ambient temperature calibration procedure outlined in Section 5.11.1.1 of this SOP.

Verify the sampler filter temperature by measuring the temperature (°C) at the filter temperature sensor using an external thermometer (actual). Do this by inserting the temperature sensor probe into the sampling platform from above. Compare the actual temperature (°C) with the Filt Temp (current) displayed in the Audit Screen. If the actual and current readings are not within ±2°C, perform the filter temperature calibration described in Section 5.11.1.1 of this SOP.

Verify the sampler compartment temperature by measuring the temperature (°C) at the compartment temperature sensor using an external thermometer (actual). Do this by placing the temperature sensor probe next to the compartment temperature sensor. Compare the actual temperature (°C) with the Filt Comp Temp (current) displayed in the Audit Screen. If the actual and current readings are not within ±4°C, perform the filter compartment temperature calibration described in Section 5.11.1.2 of this SOP.

Verify the sampler ambient pressure by measuring the ambient station pressure in mmHg with an external barometer. Verify that the value for the ambient pressure (current) displayed in the Audit Screen is within ±7 mmHg of the actual barometric pressure. If the pressure is not within ±7mmHg, an investigation will be done that may require the need to recalibrate. Refer to Section 5.11.2 of this SOP for pressure calibration procedures.

Perform an external leak check. Remove the 1st stage inlet from the sampler tube and install the flow audit adapter on the sampler tube. Press <F4:FiltAdv> to move the leak check filter into position. Close the valve on the flow audit adapter. Press <F5:LeakChk>, then press <F2:Start> and follow the directions displayed on the screen. A Pass or Fail message will display at the end of the leak check cycle where you will slowly open the valve. If a Fail message is displayed, repeat the leak check with a different cassette. If a second leak check "fails", see the service manual provided by the manufacturer and do not resume sampling until the sampler consistently passes external leak checks. If the condition that caused the leak check to fail is likely to have affected previous samples, they may be subject to invalidation.

Verify sampler flow. Attach the flow standard (BIOS or FTS) to the flow audit adapter. Press <F5:Audit> to enter the Audit Screen. Confirm that the FTS "m" and "b" calibration constants are entered in the Audit Screen. Ensure the flow audit adapter valve is in the open position. Confirm that 16.7 l/min is the set flow in the Set Flow field. Press <F1:Pump> then press <F2:Valve> to begin the flow check. Wait for the flow rate displayed in the Cur (Current) column to stabilize. Press <EDIT> to enter the pressure drop (inches H2O) from the Digital Manometer display, and press <ENTER>. The sampler will calculate and display the FTS volumetric flow. See section 5.12.1.5 for the acceptance criteria for a flow rate verification. However, if the flow verification exceeds ±3% an investigation will be performed that may lead to a flow recalibration and /or a an analog I/O calibration see section 5.12.7 of this SOP for guidance. Failure to meet this

criteria may result in the invalidation of samples back to the last successful flow rate verification.

Press <F2:Valve> then <F1:Pump> to turn off the pump.

Perform an internal leak check. Press <F4:FiltAdv> to move the cassette with the impermeable disk into position. Ensure the valve on the flow audit adapter is still open. Press <F5:LeakChk>, then press <F2:Start> and follow the directions displayed on the screen. A Pass or Fail message will display at the end of the leak check cycle. If a Fail message is displayed, repeat the leak check. If a second leak check "fails", see the service manual provided by the manufacturer and do not resume sampling until the sampler consistently passes internal leak checks. If the condition that caused the leak check to fail is likely to have affected previous samples, they may be subject to invalidation. Press <ESC> twice to return to the main screen. Press <RUN/START> to return the sampler to the Wait mode.

Restore the sampling hardware to its original state by removing the flow transfer standard and replacing the 1st stage inlet on sampler tube. Reinstall the VSCC for the PM2.5 or the pass through adapter tube for PM10.

All steps are to be recorded on a "Verification Field Sheet" Forms 4 & 5, Appendix A.

5.12.4.2Maintenance of the Top Acceleration Assembly.
Mark the top plate deflector cone and lower plate with a pencil scribe to facilitate proper orientation for easier reassembly after cleaning and maintenance. Using a Phillips blade screwdriver, remove the four pan head screws from the top of the top plate, and lift the top plate off the four threaded spacer standoffs and set aside. Inspect the insect screen for contamination and clean by lifting the screen off the lower plate rain deflector and brush or rinse with water until clean. Dry and reinstall. Using a general purpose cleaner and paper towel, clean the top plate deflector cone and internal wall surface of the acceleration assembly. Be sure that after cleaning is complete, the acceleration nozzle is clean. If not, use a cotton swab and cleaner to remove contamination. Inspect the large diameter impactor nozzle O-ring for wear. Replace if necessary, or using a light coating of silicone grease, apply a thin film on the O-ring itself; and likewise a small light coating on the aluminum threads of the acceleration assembly. After reinstalling the bug screen, align the top plate markings with the lower plate markings. The four holes in the top plate should align with the four spacer standoffs. Insert and tighten securely the four pan head screws.

5.12.4.3 Maintenance of the Lower Collector Assembly
It is on the collector plate that most of the contamination in the inlet is found. The threads should be cleaned to facilitate a tight seal when the two halves are reassembled. Follow the steps below to clean the lower collector assembly:

Using a general purpose cleaner with a paper towel, clean the collector assembly walls and the three vent tubes. A cotton swab may be necessary to clean these vent tubes. Likewise, clean the bottom side of the collector assembly. Using a cotton swab, also clean the weep hole in the collector plate where the moisture runs out to the moisture

trap. Remove the rain jar and clean. Inspect the brass nipple fitting to ensure tightness and non-blockage. When reinstalling the rain jar, place a light coating of silicone grease on the gasket inside the cap of the rain jar. This will ensure a leak-free fit. Inspect the two inlet-to-inlet tube sealing O-rings for wear. Replace if necessary. Use a light coating of silicone grease on these O-rings to ensure that a seal is made when reinstalled on the 1 ¼" OD sampler tube.

5.12.4.4 Reassemble and Reinstallation of Inlet

Reassemble the top and bottom inlet assemblies until the threads tighten. Hand-tighten only. Carefully place the inlet back on top of the 1 ¼" OD sample tube. Take care not to damage the internal O-rings. The performance verification and maintenance is now complete. Replace the 1st stage inlet on the sample tube by pressing down until it hits a stop. Press <F4:FiltAdv> to push the internal leak check disk from the sampler into the storage magazine. Rotate and pull down on the storage magazine with the leak check cassettes. Install an empty storage magazine. Press <ESC> twice to return to the Main Screen, then press <RUN/STOP> to return to the WAIT mode.

Note: If a problem is recognized while performing any maintenance, diagnostic, external, or internal checks which has or could affect data a corrective action form is to be filled out describing the problem identified and the action taken to correct the problem. All information should be recorded on a "Corrective Action Form" Form 6, Appendix A.

5.12.5 Programming the Sampler

This section describes the procedures for programming the sampler for a sampling run. A supply magazine with the desired number of pre-weighed 47 mm Teflon filters in cassettes (including blanks) should be installed in the left side of the enclosure and a clean empty storage magazine should be installed on the right side of the enclosure. Check to make sure the magazine number on the Chain-of-Custody sheets matches the number on the magazine itself.

Press <F3:FiltSet> to display the Filter Setup screen then press <F4:FiltLst>. Press <EDIT>, enter the filter ID #'s and the cassette ID #'s in the appropriate fields. A blank can also be selected in the Filter List Setup screen. After all the filter and cassette ID's have been entered, verify them against the COC sheets. When done, press <ENTER> then <ESC> twice to return to main screen.

NOTE: There are two critical sampling conditions that will cause the sampler to change from the Sampling mode to the Err mode. The measured flow rate deviates from its set point by ≥10% for more than 60 seconds (status condition S1–S3). A filter exchange error occurs (status condition X). Should either of these conditions occur, the sampler will display **Err** in the upper right hand corner of the Main Screen. The Err mode causes the sampler to shut down until the user presses <RUN/STOP> and enters a new sampling program. Any time either of these conditions occur during a sampling run, the red status light on the outside, top of the enclosure will flash continuously to alert the user to a critical status condition. Refer to Section 7 of the Operating Manual for a complete description of status codes.

5.12.6 Post-Sampling Verification and Data Retrieval

This section describes the procedures for verifying the sampling run status, verifying filter integrity/sequence and retrieving the sampling run data. The sample will be removed from the monitor within 96 hours (4 days) of the end of the sample run, however in the unlikely event that it is not retrieved from the sampler within 96 hours it must be picked up within 177 hours(7days 9 hours) of the end of the sample run.

Data can be displayed on the screen or downloaded to a personal computer or hand held palm while in the Stop, Sampling, Done, Error or Audit modes. For more specific data retrieval information, refer to **SOP Section 15, Data Retrieval, Validation and Submission**.

Cassette magazines can be changed in any mode (except at the time a filter change is occurring).

Visually check to ensure that the filter was not damaged during sampling. The following checks should be performed to identify problems while operator is still in the field:

- Ensure that the number of filters being picked up corresponds with the number of chain of custody sheets filled out for that time period.
- Check to see if the filters came out in the expected order.
- Operators can also verify that the number of filters in the magazine on the left side correspond to future sampling periods.
- Check to see if each filter was exposed by reviewing the data files.
- Check for consistency between the magazine, electronic data file and paperwork.

Remove and cap the storage magazine containing the sampled filters. Place the capped magazine in a metal transport container. Make sure that a loaded supply magazine and an empty storage magazine are installed before the scheduled start of the next sampling run. For more specific information on transport and storage of sampled filters, refer to Section 19 of Polk County Air Quality SOP.

5.12.7 Analog I/O Calibration

5.12.7.1 Quality Control

The operator may run this calibration upon failure of flow verification. Analog I/O Calibration – Follow the steps below to execute an automatic calibration of the sampler's analog input and output channels:

The Partisol®-Plus Sampler performs automatic calibrations of its analog input and output channels on the following basis:

- If the sampler enters the Stop Operating Mode upon power-up by the user (not a recovery from a power failure), the unit automatically performs a calibration of its analog input and output channels.

- At an interval of every 30 minutes, the Partisol®-Plus Sampler conducts an automatic calibration of its analog input channels.

- The user can manually instruct the unit to calibrate its analog input and output channels automatically by following the procedure below.

NOTE: This unit's automatic calibration of analog input and output channels is made possible by reference voltages of 0.025 and 2.5 VDC that are precisely maintained within the sample.

5.12.7.2 Calibration Procedures

The automatic analog input and output calibration is initiated by entries in the service menu. Press <MENU>, scroll to Service Mode, press <ENTER> and then <F4:YES> to enter the Service Menu. With the cursor pointing to "Calibration/Audit", press <F2:I/O Cal> to enter the I/O Calibration screen.

Press <F2:Start> to initiate the sampler's automatic calibration of its analog input and output channels. The "Calibrating" indicator appears in the upper left-hand corner of the screen while the device executes the procedure.

The calibrations procedure takes approximately 5 minutes, and continues until the "Calibrating" indication no longer appears on the I/O Calibration screen. Do not attempt to leave this screen while the calibrating is taking place.

Press <ESC>, scroll to "Exit Service Mode", and press <ENTER>.

5.13 Validation and Reporting of Data

5.13.1 Calculation Validation

Data that are needed to compute the mass concentration of PM2.5 and PM10 originate from two main sources: field operations and laboratory operations. Laboratory operations are the responsibility of The State of Iowa Hygienic Lab, and are better outlined in SHL's SOP. Data must be validated to ensure that all reported PM2.5 and PM10 measurements are accurate relative to the overall scope of the quality assurance program. When the final mass concentration of PM2.5 or PM10 in a sample has been computed, the validation procedure not only will check on these computations, but also will aid in the flagging of questionable mass concentrations (i.e., extremely high or low values). For example, comparisons should be made among discrete PM2.5 and PM2.5 FDMS TEOM data to check for outliers in the data. Therefore, should a mass concentration approach the primary or secondary ambient air quality standard, this validation procedure will provide checks for all preliminary field and laboratory operations. The steps of the calculation validation procedure are outlined in Section 20 of the Polk County Air Quality SOP.

5.13.2 Final Data Validation

Data that satisfies the requirements of this SOP, the Polk County QAPP, and the "PM2.5 Mass Validation Criteria" will be certified as valid.

5.13.3 Data Reporting

Data is coded into telemetry system database from the laboratory reports. After the data is logged and edited the monitoring specialists will prepare monthly, quarterly and annual summary reports and transmit the data to the Iowa Department of Natural Resources Air Quality Bureau.

APPENDIX A-Critical Forms and Field Sheets

Form 1.....**PM2.5 Audit Field Sheet**
Form 2.....**PM10 Audit Field Sheet**
Form 3.....**PM2.5/PM10 Annual Calibration Field Sheet**
Form 4..... **PM2.5 Verification Field Sheet**
Form 5.....**PM10 Verification Field Sheet**
Form 6.....**Corrective Action Form**

Form 1: PM 2.5 Audit Field Sheet

PM2.5 QUARTERLY AUDIT

Site Name:_____
Site Location:_____
Technician's Name:_____
Observer's Name:_____

Date:_____
Time:_____
Sampler ID:
Sampler Model: 2025

1) TEMPERATURE (T) VERIFICATION

	Sampler	Actual	
Amb. Temp. ('C)			≤2 'C difference
Filter Comp Temp. ('C)			≤4 'C difference
Filter Temp. ('C)			≤2 'C difference

Note: Perform an investigation if the sampler and actual temperatures are not within the limits set in that specified row.

2) PRESSURE (P) VERIFICATION

	Sampler	Actual	
Amb. Pressure (mmHg)			≤10 mmHg difference

Note: Perform an investigation if the sampler and actual pressures are not within 10 mmHg difference.

LEAK CHECKS:

3) External	Pass or Fail ≤25 mmHg/min	Indicated mmHg/min
Leak Check		
2nd Attempt		
5) Internal	**Pass or Fail ≤140 mmHg/min**	**Indicated mmHg/min**
Leak Check		
2nd Attempt		

Note: Perform a second attempt if initial leak check fails to meet the criteria specified in the Pass or Fail column.

4) FLOW RATE CHECK:

Set Point (l/min)	16.70	
"Sampler" Flow (l/min)		
"Actual Flow"		
(Sampler - Actual)/Actual x 100 =	%	≤4%
(Sampler - 16.7)/16.7 x 100 =	%	≤5%
Sampler Flow with PM 10 Inlet installed		
(Sampler - 16.7)/16.7 x 100 =	%	≤2%

Note: Perform an investigation if the percent difference is greater than that specified in its' row.

	Manufacturer	Model	Serial Number	Recertification Date
Temperature Reference	Oakton	Temp 10 T		
Pressure Reference	CE	Handheld		
Flow Standard	Chinook/Dwyer	Series 475/ Mark III		

Comments: _____

Form 2: PM 10 Audit Field Sheet

PM10 QUARTERLY AUDIT

Site Name:_____
Site Location:_____
Technician's Name:_____
Observer's Name:_____

Date:_____
Time:_____
Sampler ID:
Sampler Model: 2025

1) TEMPERATURE (T) VERIFICATION

	Sampler	Actual	
Amb. Temp. (°C)			<2 °C difference
Filter Comp Temp. (°C)			≤4 °C difference
Filter Temp. (°C)			≤2 °C difference

Note: Perform an investigation if the sampler and actual temperatures are not within the limits set in that specified row.

2) PRESSURE (P) VERIFICATION

	Sampler	Actual	
Amb. Pressure (mmHg)			≤10 mmHg difference

Note: Perform an investigation if the sampler and actual pressures are not within 10 mmHg difference.

LEAK CHECKS:

3) External	Pass or Fail ≤25 mmHg/min	Indicated mmHg/min
Leak Check		
2nd Attempt		
5) Internal	**Pass or Fail ≤140 mmHg/min**	**Indicated mmHg/min**
Leak Check		
2nd Attempt		

Note: Perform a second attempt if initial leak check fails to meet the criteria specified in the Pass or Fail column.

4) FLOW RATE CHECK:

Set Point (l/min)	16.70	
"Sampler" Flow (l/min)		
"Actual Flow"		
(Sampler - Actual)/Actual x 100 =	%	≤4%
(Sampler -16.7)/16.7 x 100 =	%	≤5%
Sampler Flow with PM 10 Inlet installed		
(Sampler - 16.7)/16.7 x 100 =	%	≤2%

Note: Perform an investigation if the percent difference is greater than that specified in its' row.

	Manufacturer	Model	Serial Number	Recertification Date
Temperature Reference	Oakton	Temp 10 T		
Pressure Reference	CE	Handheld		
Flow Standard	Chinook/Dwyer	Series 475/ Mark III		

Comments: _____

Form 3: PM2.5/PM10 Annual Calibration Field Sheet

PM2.5/10 ANNUAL CALIBRATION

Site Name:_____
Site Location:_____
Technician's Name:_____
Observer's Name:_____

Date:_____
Time:_____
Sampler ID:_____
Sampler Model: 2025

4) FLOW RATE CALIBRATION:

Sampler flow rate before audit (l/min):	

	Sampler's flow (l/min)	Audit device flow (l/min)
1)		
2)		
3)		
AVG		

(Sampler Avg - Audit Avg)Audit Avg x 100 =	%	≤4%

Set Point (l/min)	16.70	
Sampler Flow (l/min)		
Actual Flow (l/min)		
Sampler - Actual)/Actual x 100	%	≤2%
(Sampler - 16.7)/16.7 x 100	%	<5%
r Flow w/PM 10 inlet installed		
(Sampler - 16.7)/16.7 x 100		≤2%

Note: When performing any audit, the sampler and the audit device must fall within the specified limitations noted next to each test. If they do not, perform the appropriate calibration.

Comments:

1) TEMPERATURE AUDIT:

		Sampler Indicated	Actual	
Ambient Probe	1)			
	2)			
	3)			
	Avg.			
Sampler Avg - Audit Avg =				±2°C
Filter Compartment	1)			
	2)			
	3)			
	Avg.			
Sampler Avg - Audit Avg =				±2°C
Filter	1)			
	2)			
	3)			
	Avg.			
Sampler Avg - Audit Avg =				±2°C

Form 3: PM 2.5/PM 10 Annual Calibration Field Sheet Continued

2) PRESSURE (P) CALIBRATION

	Sampler's pressure (mmHg)	Actual pressure (mmHg)	
1)			
2)			
3)			
AVG.			
Sampler Avg - Audit Avg =			≤10 mmHg

LEAK CHECKS:

3) External	Indicated mmHg/min	Pass or Fail ≤25 mmHg/min
Leak Check		
2nd Attempt		
5) Internal	**Indicated mmHg/min**	**Pass or Fail ≤140 mmHg/min**
Leak Check		
2nd Attempt		

***Note*: Perform a second attempt if initial leak check fails to**

	Manufacturer	Model	Serial Number	Recertification Date
Temperature Reference	Oakton	Temp 10 T		
Pressure Referenc	CE	Handheld		
Flow Standard	Chinook/Dwyer	Series475/MarkIII		

Form 4: PM 2.5 Verification Field Sheet

PM2.5 MONTHLY VERIFICATION

Site Name:_____ Date:_____
Site Location:_____ Time:_____
Technician's Name:_____ Sampler ID:
Observer's Name:_____ Sampler Model: 2025

1) TEMPERATURE (T) VERIFICATION

	Sampler	Actual	
Amb. Temp. ('C)			≤2 'C difference
Filter Comp Temp. ('C)			≤4 'C difference
Filter Temp. ('C)			≤2 'C difference

Note: Perform an investigation if the sampler and actual temperatures are not within the limits set in that specified row. Calibrate if necessary

2) PRESSURE (P) VERIFICATION

	Sampler	Actual	
Amb. Pressure (mmHg)			≤10 mmHg difference

Note: Perform an investigation if the sampler and actual pressures are not within 7 mmHg difference. Calibrate if necessary

LEAK CHECKS:

3) External	Pass or Fail ≤25 mmHg/min	Indicated mmHg/min
Leak Check		
2nd Attempt		
5) Internal	**Pass or Fail ≤140 mmHg/min**	**Indicated mmHg/min**
Leak Check		
2nd Attempt		

Note: Perform a second attempt if initial leak check fails to meet the criteria specified in the Pass or Fail column.

4) FLOW RATE CHECK:

Set Point (l/min)	16.70	
"Sampler" Flow (l/min)		
"Actual Flow"		
(Sampler - Actual)/Actual x 100 =	%	≤4%
(Sampler - 16.7)/16.7 x 100 =	%	≤5%
Sampler Flow with PM 10 Inlet installed		
(Sampler - 16.7)/16.7 x 100 =	%	≤2%

Note: Perform an investigation if the percent difference is greater than that specified in its' row. Calibrate if necessary

	Manufacturer	Model	Serial Number	Recertification Date
Temperature Reference	Oakton	Temp 10 T	451029	3/4/2014
Pressure Reference	CE	Handheld	515	2/18/2015
Flow Standard	Chinook/Dwyer	Series 475/ Mark III	622/201	10/11/2014

	Yes or No
Cleaned VSCC (Monthly)	
Cleaned Circulating Fan Filters (every mont	
Cleaned Filter Compartment (every month):	
Clean PM10 Inlet (15 events/monthly):	

Comments:_____

Form 5: PM 10 Verification Field Sheet

PM10 MONTHLY VERIFICATION

Site Name:_____ Date:_____
Site Location:_____ Time:_____
Technician's Name:_____ Sampler ID:
Observer's Name:_____ Sampler Model: 2025

1) TEMPERATURE (T) VERIFICATION

	Sampler	Actual	
Amb. Temp. ('C)			≤2 'C difference
Filter Comp Temp. ('C)			≤4 'C difference
Filter Temp. ('C)			≤2 'C difference

Note: Perform an investigation if the sampler and actual temperatures are not within the limits set in that specified row. Calibrate if necessary

2) PRESSURE (P) VERIFICATION

	Sampler	Actual	
Amb. Pressure (mmHg)			≤10 mmHg difference

Note: Perform an investigation if the actual and sampler pressures are not within 7 mmHg difference. Calibrate if Necessary

LEAK CHECKS:

3) External	Pass or Fail ≤25 mmHg/min	Indicated mmHg/min
Leak Check		
2nd Attempt		
5) Internal	**Pass or Fail ≤140 mmHg/min**	**Indicated mmHg/min**
Leak Check		
2nd Attempt		

Note: Perform a second attempt if initial leak check fails to meet the criteria specified in the Pass or Fail column.

4) FLOW RATE CHECK:

Set Point (l/min)	16.70	
"Sampler" Flow (l/min)		
"Actual Flow"		
(Sampler - Actual)/Actual x 100 =	%	≤4%
(Sampler - 16.7)/16.7 x 100 =	%	≤6%
Sampler Flow with PM 10 Inlet Installed		
(Sampler - 16.7)/16.7 x 100 =	%	≤2%

Note: Perform an investigation if the percent difference is greater than that specified in its' row. Calibrate if necessary

	Manufacturer	Model	Serial Number	Recertification Date
Temperature Reference	Oakton	Temp 10 T	451029	3/4/2014
Pressure Reference	CE	Handheld	515	2/18/2014
Flow Standard	Chinook/Dwyer	Series 475/ Mark III	622/201	10/11/2014

	Yes or No
Cleaned Circulating Fan Filter (monthly):	
Cleaned Filter Compartment (monthly):	
Cleaned PM10 Inlet/downtube (15 events/m	

Comments: _____

Form 6: Corrective Action Form

Polk County Corrective Action Form

To: _____ Polk Co. Air Quality _____
_____
(position)

From: _____

Copies of completed form to: AQ Supervisor, File

Urgency: ☐ Emergency (immediate action needed) ☐ Urgent (24 Hr.)

☐ Routine (7 days) ☐ Next scheduled visit ☐ Information only

Problem Identification:

Site: _____
System: _____
Date: _____

Description of Problem: _____
_____
_____
_____
_____
_____

Recommended Action: _____
_____
_____
_____
_____
_____
_____

Signature of Initiator: _____ Date: _____
_____

Problem Resolution:

Date of Corrective Action: _____

Summary of Corrective Action: _____
_____
_____