Polk County
Zoning Ordinance

Unincorporated Polk County, Iowa

Adopted: September 10, 2007
Amended December 12, 2007
Amended August 12, 2008
Amended April 13, 2010
Amended October 11, 2016
Amended June 4, 2018
Amended February 1, 2019

Zoning Ordinance
Unincorporated Polk County, Iowa

Board of Supervisors

Robert Brownell
Angela Connolly
Matt McCoy
Steve Van Oort
Tom Hockensmith

Planning and Zoning Commission

Dave Campbell
Mikki Stier
Mike Fairchild
Gary Randa
Ray Sprague
Frank Steinbach
Merle Hicks

Board of Adjustment

Bonnie Thorn
Mike McCoy
Ron Fischer
Paul Kruse

TABLE OF CONTENTS

ARTICLE 1. TITLE, PURPOSE AND JURISDICTION 1

DIVISION 1. GENERAL PROVISIONS 1

Section 1. Title 1

Section 2. Intent 1

Section 3. Jurisdiction 1

Section 4. Purpose 1

Section 5. Jurisdiction 2

Section 6. Conflicting Provisions 2

Section 7. Relief from Other Provisions 3

Section 8. County Exemption 3

Section 9. Severability of Provision 3

ARTICLE 2. DEFINITIONS 4

DIVISION 1. RULES OF CONSTRUCTION 4

DIVISION 2. WORDS AND TERMS DEFINED 4

Section 1. Word Definitions 4

Section 2. Abbreviations 20

ARTICLE 3. ESTABLISHMENT OF ZONING DISTRICTS 21

DIVISION 1. ZONING DISTRICTS 21

DIVISION 2. MAP OF ZONING DISTRICTS 22

Section 1. Interpretation of District Boundaries 22

DIVISION 3. DESCRIPTIONS AND INTENT OF ZONING DISTRICTS 23

Section 1. Rural Districts 23

Section 2. Residential Districts 24

Section 3. Mixed Use District 25

Section 4. Commercial Districts 25

Section 5. Industrial Districts 25

Section 6. Open Space District 26

ARTICLE 4. USE REGULATIONS 27

DIVISION 1. PURPOSE 27

DIVISION 2. TABLE OF USES 27

Table 4.1 Table of Uses *27*
DIVISION 3. USE IN OPEN SPACE 29
Table 4.2 Uses in Open Space *29*
DIVISION 4. USE CATEGORIES AND STANDARDS 30
Section 1. Agricultural Uses *30*
Section 2. Residential Uses *32*
Section 3. Institutional Uses *34*
Section 4. Commercial Uses *38*
Table 4.3 Adult Use Separation Requirements *44*
Table 4.4 Indoor Firearm Range Separation Requirements *54*
Table 4.5 Extraction Use Required Setback from Abutting Uses *60*
Table 4.6 Disposal Use Required Setback from Abutting Property *64*
DIVISION 5. TEMPORARY USES 65
Section 1. Authorization *65*
Section 2. Permit Required *65*
Section 3. Use Limitation *65*
Section 4. Particular Temporary Uses Permitted *65*
DIVISION 6. ACCESSORY REGULATIONS 70
Section 1. Residential Accessory Buildings *70*
Section 4. Swimming Pools *72*
Section 5. Fences and Retaining Walls *72*
Section 6. Non-residential Accessory Uses *73*
DIVISION 7. ANIMAL REGULATIONS 74
Section 1. Keeping of Animals *74*
DIVISION 8. CONDITIONAL USES 75
Section 1. Review Standards *75*
Section 2. General Standards *75*
Section 3. Procedures *76*
Section 4. Conditions on Conditional Use Permit Approvals *77*
Section 5. Violations *77*
DIVISION 9. AGRICULTURAL EXEMPTION 78
Section 1. Determination *78*
Section 2. Exceptions to Exemption *78*

ARTICLE 5. DISTRICT PERFORMANCE STANDARDS 79

DIVISION 1. PURPOSE 79

DIVISION 2. DEVELOPMENT STANDARDS 79

DIVISION 3. RESIDENTIAL PERFORMANCE STANDARDS 79

Section 1. Minimum Requirements 79

Section 2. Minimum Services 79

Section 3. Residential Development Calculations Worksheet 79

Section 4. Required Calculations 80

Table 5.1 Residential Density Standards 81

DIVISION 4. NON-RESIDENTIAL PERFORMANCE STANDARDS 83

Section 1. Minimum Requirements 83

Section 2. Minimum Service 83

Section 3. Non-Residential Development Calculations Worksheet 83

Section 4. Required Calculations 83

Table 5.2 Non-Residential Development Performance Standards 84

ARTICLE 6. BULK AND USE STANDARDS 86

DIVISION 1. PURPOSE 86

DIVISION 2. SINGLE-FAMILY RESIDENTIAL BULK STANDARDS 86

Table 6.1 Table of Single-Family Bulk Standards (Standard & Cluster & Mobile Home) 86

DIVISION 3. BULK STANDARDS FOR PLANNED DEVELOPMENTS. 87

Section 1. Bi-attached House 87

Section 2. Townhouse 88

Section 3. Brownstone Townhouse 89

Section 4. Detached Townhouse 90

Section 5. Conservation House 91

Section 6. Apartment Buildings 92

DIVISION 4. BULK STANDARDS FOR MOBILE HOME PARK 93

DIVISION 5. NON-RESIDENTIAL BULK STANDARDS 94

Table 6.9 Nonresidential Bulk Standards (measured in feet) 94

DIVISION 6. EXCEPTIONS TO DIMENSIONAL REQUIREMENTS FOR BUILDINGS AND STRUCTURES 95

Section 1. Structures Permitted Above Height Limits 95

Section 2. Encroachments and Projections in the Required Setback 95

Section 3. Easement Encroachments 96

DIVISION 7. STREET FRONTAGE 97
Section 1. Single Family Residential, including townhouses 97
Section 2. Apartments and non-residential development 97

ARTICLE 7. NATURAL RESOURCE PROTECTION 98

DIVISION 1. PURPOSE 98
DIVISION 2. APPLICABILITY 98
DIVISION 3. NATURAL RESOURCE PROTECTION STANDARDS 98
DIVISION 4. NATURAL RESOURCES 98
Section 1. Floodplains 98
Section 2. Streams 115
Section 3. Drainageways 118
Section 4. Woodlands: Mature and Young 119
Exhibit 7.1 Development Pad 120
Section 5. Wetlands 123
Section 6. Native Prairies 124

ARTICLE 8. STORMWATER AND EROSION CONTROL MANAGEMENT 125

DIVISION 1. STORMWATER RUNOFF 125
Section 1. Excess Stormwater Runoff 125
Section 2. Limitation of Stormwater Runoff 125
Section 3. Maintenance of Drainage Easement 125
Section 4. Runoff and Downspout Controls 126
Section 5. Stormwater Detention Required 126
Section 6. Design Criteria 127
Section 7. Design Regulations 128
Exhibit 8.1 Wet basin design 129
Section 8. Maintenance of Facilities 130
Section 9. Inspection of Facilities 130
DIVISION 2. EROSION AND SEDIMENT CONTROL 131
Section 1. General 131
Section 2. Applicability 131
Section 3. Additional Standards 131
Section 4. Grading Permit Required 131

Section 5. Other Permits Required and Exceptions 132
Section 6. Exemptions 132
Section 7. Additional Requirements 133
Section 8. Stormwater Pollution Prevention Plan (SWPPP) Required. 133
Section 9. NPDES General Permit No. 2 Required 134
Section 10. Inspection, Notice to Comply and Notice of Violation 135
Section 11. Repair and Clean-Up of Damage. 136
Section 12. Enforcement 136
Section 13. Fees. 136

ARTICLE 9. CONSERVATION DESIGN 137

DIVISION 1. PURPOSE 137
DIVISION 2. LOW IMPACT DEVELOPMENT 137
DIVISION 3. DEVELOPMENT CONSIDERATIONS 137
Section 1. Residential Development Options 137
Section 2. Clustering 137
Section 3. Density Bonus 137
Section 4. Open Space 138
Section 5. Ownership and Maintenance of Open Space and Related Structures 138

ARTICLE 10. LANDSCAPING 140

DIVISION 1. PURPOSE 140
DIVISION 2. LANDSCAPING AREA REQUIREMENTS 140
Section 1. Landscaping Determination 140
Section 2. Standard Plant Units 141
Figure 10.1 Standard Landscaping Plant Units 141
DIVISION 3. LANDSCAPING CALCULATIONS 142
Section 1. Parking Lot Landscaping Calculations 142
Figure 10.2 Parking Lot Landscaping 142
Section 2. Peripheral Bufferyard Calculations 142
Section 3. Street Bufferyard Calculations 143
DIVISION 4. BUFFERYARD INSTALLATION RESPONSIBILITY 146
Section 1. Adjacent to vacant property 146
Section 2. Adjacent to a developed property 146

Section 3. Existing Plant Materials *146*
Section 4. Bufferyard Use *146*
DIVISION 5. OPACITY FOR BUFFERYARDS 147
Table 10.3 Peripheral Bufferyards: Required Opacity Values *147*
Section 1. Plant Materials *148*
Section 2. Landscaping Bufferyard Requirements *149*
Table 10.4 Landscaping Bufferyard Requirements *149*
Section 3. Classification of Plant Materials *150*
Table 10.5 Plant List *150*

ARTICLE 11. SIGNS 155

DIVISION 1. GENERAL PROVISION 155
Section 1. Purpose *155*
Section 2. Sign Permit Required *155*
Section 3. Determining Sign Face Area of a Sign *156*
DIVISION 2. PROHIBITED SIGN MOVEMENT, DECORATIONS, AND PLACEMENT 157
Section 1. All signs shall meet the following provisions: *157*
DIVISION 3. PERMITTED SIGNS 158
Table 11.1 Sign Type Permitted by Use *158*
Section 1. Wall signs *159*
Section 2. Freestanding signs *159*
Section 3. Marquee signs *159*
Section 4. Graphic signs *159*
DIVISION 4. DETAILED SIGN REGULATIONS 160
Section 1. Development Signs *160*
Section 2. Off-site Signs (Billboards) *160*
Section 3. Directional Signs *160*
Section 4. Electronic Message Signs *161*
Section 5. Informational/ Educational Signs *161*
Section 6. Temporary Signs *161*
DIVISION 5. HEIGHT/CLEARANCE/ LOCATION/ ILLUMINATION 161
Section 1. Sign Height *161*
Section 2. Sign Clearance *162*
Section 3. Sign Location *162*

Section 4. All Illuminated signs *162*

ARTICLE 12. EXTERIOR LIGHTING **163**

DIVISION 1. PURPOSE 163

Section 1. Exemptions *163*

Section 2. Restrictions *163*

Section 3. Exterior Lighting Plan Required *163*

Section 4. Exterior lighting options *163*

Table 12.1 No Cutoff fixture *164*

Table 12.2 Total cutoff of an angle up to ninety (90) degrees fixture *165*

Table 12.3 Total cutoff of light at an angle less than ninety (90) degrees fixture *166*

DIVISION 2. OUTDOOR RECREATIONAL USES 167

ARTICLE 13. OFF-STREET PARKING AND LOADING **168**

DIVISION 1. OFF- STREET PARKING STANDARDS 168

Section 1. Terms defined *168*

Section 2. Required Number of Parking Spaces *168*

Section 3. Shared Parking Provisions *172*

Section 4. Phased parking *172*

Section 5. Off-Site Parking Lot *172*

DIVISION 2. PARKING LOT DESIGN 173

Section 1. Parking Lot Design Standards *173*

Section 2. Maintenance *173*

Table 13.1 Parking Stall Standards *173*

ARTICLE 14. STREET/ ROAD STANDARDS AND ACCESS **175**

DIVISION 1. STREET CLASSIFICATION 175

Table 14.1 Street Classifications *175*

DIVISION 2. ACCESS MANAGEMENT 175

DIVISION 3. TEMPORARY ACCESS 176

DIVISION 4. ROAD CONSTRUCTION STANDARDS 176

DIVISION 5. CLEAR VIEW OF INTERSECTING STREETS 176

ARTICLE 15. CONSTRUCTION STANDARD. **177**

ARTICLE 16. SITE PLANS **178**

DIVISION 1. SITE PLAN REQUIRED 178
Section 1. Major Site Plan 178
Section 2. Minor Site Plan 182
Section 3. Sketch Plan 184
DIVISION 2. PROCESSING A SITE PLAN REVIEW APPLICATION 185
Section 1. Site Plan Review Process for Permitted and Conditional Uses 185
Section 2. Documents and Filing Requirements 185
Section 3. Expiration 186
Section 4. Procedure for Amendment of Site Plan or Conditions 187
DIVISION 3. STANDARDS FOR SITE PLAN REVIEW 188
Section 1. Zoning Administrator Review 188
Section 2. Reasons for Denial 188
DIVISION 4. OWNERS ASSOCIATION 189
Section 1. When Association Required 189
Section 2. Requirements 189
Section 3. Approval by the Zoning Administrator 189

ARTICLE 17. RURAL CLUSTER DEVELOPMENT OPTION STANDARDS 191

DIVISION 1. RURAL SURVEY 191
Section 1. Residential Rural Survey Requirements 191
Section 2. Non-Residential Rural Survey Requirements 193
Section 3. Approval 193

ARTICLE 18. ORDINANCE AMENDMENT PROCEDURES 194

DIVISION 1. PURPOSE 194
Section 1. Text Amendment 194
Section 2. Map Amendment 195
DIVISION 2. PROCEDURE FOR TEXT AND/OR MAP AMENDMENT 195
Section 1. General 195
Section 2. Applications 196
Section 3. Fees 196
Section 4. Zoning Commission Public Hearing and Recommendations 196
Section 5. Board of Supervisors Public Hearing 197
Section 6. Decision 197

Section 7. *Failure to Notify* *197*
Section 8. *Repeat Applications* *197*

ARTICLE 19. VARIANCE 198

DIVISION 1. PROCEDURE 198
Section 1. *Applications* *198*
Section 2. *Filing* *198*
Section 3. *Fees* *198*
Section 4. *Processing a Filing* *198*
Section 5. *Meetings* *198*
Section 6. *Stay of Proceedings* *198*
Section 7. *Repeated Applications.* *199*
Section 8. *Final Decision by the Board of Adjustment.* *199*
DIVISION 2. GENERAL STANDARDS 199
Section 1. *General* *199*
Section 2. *Limited Effect of a Variance* *200*
Section 3. *Scope of Granting a Variance* *200*

ARTICLE 20. ISSUANCE OF PERMITS AND LICENSES 201

DIVISION 1. BUILDING PERMITS 201
Section 1. *Application* *201*
Section 2. *Issuing a Building Permit* *201*
Section 3. *Guarantee of Improvements* *202*
Section 4. *Commencement of Construction* *202*
Section 5. *Expiration* *202*
Section 6. *Fees* *202*
DIVISION 2. CERTIFICATE OF OCCUPANCY 203
Section 1. *Exceptions* *203*
Section 2. *Temporary Certificates of Occupancy* *203*
Section 3. *Structures and Uses As Provided In Building Permits, Plans and Certificates of Occupancy* *203*
Section 4. *Certificate of Occupancy/ Change of Usefor Existing Uses or Structures* *203*
Section 5. *Applications* *204*
Section 6. *Procedures for a Certificate of Occupancy* *205*

ARTICLE 21. LEGAL LOTS OF RECORD AND NONCONFORMING 206

DIVISION 1. LEGAL LOTS OF RECORD 206
Section 1. Setbacks 206
Section 2. Divisions Permitted 206
DIVISION 2. NONCONFORMING 207
Section 1. Intent 207
Section 2. Legal nonconforming use 207
Section 3. Nonconforming structures with conforming uses 207
Section 4. Nonconforming uses of land. 208
Section 5. Nonconforming uses of structures, or structures and land in combination. 208
Section 6. Strengthening unsafe structures. 209
Section 7. Change of ownership. 209
Section 8. Accessory Use, Structure, Sign 209
Section 9. Termination of Nonconforming Use 209
Section 10. Nonconforming signs 209

ARTICLE 22. ADMINISTRATION AND FEES 211

DIVISION 1. ZONING ADMINISTRATOR 211
DIVISION 2. PLANNING AND ZONING COMMISSION 212
Section 1. Purpose and Authority 212
Section 2. Appointment 212
Section 3. Powers and Duties 212
Section 4. Meetings and rules. 212
DIVISION 3. BOARD OF ADJUSTMENT 214
Section 1. Purpose and Authority 214
Section 2. Appointments and terms. 214
Section 3. Powers and Duties 214
Section 4. Meetings and rules. 214
Section 5. Hearing of appeals 215
Section 6. Petition to Court 216
DIVISION 4. INTERPRETATIONS 217
Section 1. Purpose 217
Section 2. Authority 217
Section 3. Procedure for Interpretations 217
Section 4. Interpretation by the Zoning Administrator. 218

Section 5. *Appeal*.....218
Section 6. *Standards for Interpretations and Appeals*.....218
Section 7. *Effect of Favorable Interpretation*.....219
DIVISION 5. FEES.....219

ARTICLE 23. ENFORCEMENT.....220

DIVISION 1. VIOLATIONS.....220
Section 1. *Prevention of Violations*.....220
Section 2. *Violations*.....220
DIVISION 2. PENALTIES AND REMEDIES.....221
Section 1. *Penalties*.....221
Section 2. *Remedies*.....221

Article 1. Title, Purpose and Jurisdiction

Division 1. General Provisions

Section 1. Title

This Ordinance shall be known as the "Polk County Zoning Ordinance", and is generally referred to herein as "the Zoning Ordinance," "this ordinance," "the ordinance" or "these regulations."

Section 2. Intent

In enacting this Ordinance, special attention has been given to ensure that it conforms to the Comprehensive Plan for Polk County. The intent of this Ordinance is to implement the vision, goals and policies of the current Comprehensive Plan.

Section 3. Jurisdiction

The provisions of this Ordinance shall apply to the land within unincorporated Polk County.

Section 4. Purpose

The purpose of this Ordinance is the implementation of the Comprehensive Plan and the protection and promotion of the health, safety, and general welfare of the present and future residents of the County. More specifically, the purposes of this Ordinance are to:

- Establish a rational pattern of land use and encouraging the most appropriate use of individual pieces of land throughout the County.
- Divide the unincorporated area of the County into districts of distinct community character according to the use of land and buildings, the intensity of such use (including bulk and height and surrounding open space.)
- Regulate and restrict the location and use of buildings, structures, and land for commercial, industrial, residential and other uses.
- Encourage compatibility between different land uses and to protect the scale and character of existing development from the encroachment of incompatible uses;
- Secure adequate light, clean air, convenience of access, and safety from fire, flood and other danger, which may include providing adequate open spaces for light, air and outdoor uses.
- Regulate the bulk, scale, and density of new and existing structures to achieve the community character of the Comprehensive Plan.
- Provide a transition between areas of different community character.
- Preserve and enhance the rural areas of the County with the understanding that the County is developing and increasing in population and will continue to become more urbanized.
- Preserve and protect the County's natural resources including flood plains, streams, drainageways, woodlands, wetlands, and native prairies.

- Avoid or lessen the hazards of flooding and stormwater accumulation and runoff.
- Avoid or lessen the hazards of soil erosion.
- Preserve the best agricultural soils for future production.
- Preserve and protecting natural habitats for wildlife.
- Create an environment that is safe from fire, flood, and other dangers.
- Protect the tax base by facilitating cost-effective development within the County.
- Encourage the most efficient use of existing and planned public facilities and utilities.
- Protect existing public facilities and utilities from being overloaded.
- Minimize or avoid congestion in the public streets and to ensure safe, convenient and efficient traffic circulation by both limiting the number of friction points, such as intersections and driveways, and minimizing other hazards.
- Protect and enhance a pattern of streets and highways that produces a unified, safe, and efficient system for movement within the County. Protect residential streets from degradation by nonresidential traffic.
- Ensure adequate and safe roads and facilities by limiting land use intensity to the capacity of the roads or facilities.
- Establish and regulate setback lines along streets and highways, property lines, and drainage facilities.
- Promote infrastructure projects that encourage economic development within the County.
- Protect landowners from adverse impacts of adjoining developments.
- Protect and respect the justifiable reliance of existing residents, businesses, and taxpayers on the continuation of existing, established, and planned land use.
- Promote planned and balanced growth to increase the tax base to protect existing property owners.
- Define the powers and duties of administrative officers and bodies necessary to administer this Ordinance.
- Prescribe penalties for the violation of the provisions of this Ordinance.

Each purpose listed above serves to balance the interests of the general public of the County and those of individual property owners. The Zoning Ordinance shall be interpreted, administered and enforced in a manner that is consistent with the foregoing purposes.

Section 5. Jurisdiction

This Ordinance is adopted pursuant to the authority granted by the Constitution of Iowa.

Section 6. Conflicting Provisions

The Zoning Ordinance shall be held to provide the minimum requirements necessary for the promotion of the public health, safety, and welfare. If any provision of the Zoning Ordinance

conflicts with any other provision of the Zoning Ordinance, any other Ordinance of Polk County, or any applicable State or Federal law, the more restrictive provision shall apply.

Section 7. Relief from Other Provisions

Nothing in these provisions shall relieve any property owner or user from satisfying any condition or requirement associated with a previous approval, special/conditional use permit, variance, development plan, or other permit issued under any local, State, or Federal ordinance or statute.

Section 8. County Exemption

Polk County should comply with the requirements of this Ordinance regarding County owned land and structures to the extent reasonably feasible and consistent with its overall duties and responsibilities to the public. The use of land and structures on a site owned by Polk County may be exempt from the terms and provisions of this Ordinance.

Section 9. Severability of Provision

If any section, clause, or phrase of this Ordinance is for any reason held to be unconstitutional or invalid, such decision shall not affect the validity of the remaining portions of this Ordinance.

Article 2. Definitions

Division 1. Rules of Construction

(A) Words not defined in this Ordinance shall use the definitions in the Iowa Code; and if not defined therein, their ordinary and common meaning.

(B) Words used in the present tense include the future tense.

(C) Words in the singular number include the plural number, and words in the plural number include the singular number, unless otherwise indicated.

(D) The words “shall”, “will” and “must” are mandatory in nature creating an obligation or duty to comply with the particular provision.

(E) In case of any difference of meaning or implication between the text of this Ordinance and any caption, illustration, or table, the text shall control.

(F) Common References

(G) A reference to an Article shall mean an Article of this Ordinance.

(H) The word "County" shall mean Polk County, Iowa.

(I) The phrase "Board of Adjustment" shall mean the Polk County Board of Adjustment.

(J) The word "Supervisors" shall mean the Polk County Board of Supervisors.

(K) The words "Planning Commission" or "Zoning Commission" shall mean the Polk County Planning and Zoning Commission.

(L) The word "Recorder" shall mean the County Recorder of Polk County.

Division 2. Words and Terms Defined

Section 1. Word Definitions

Abutting. Having a common border or being separated from such common border by, an alley or easement, other than publicly dedicated and approved easements and roads.

Access. A means of vehicular approach or entry to or exit from property, from a street, or highway.

Access Easement. An easement that grants the right to cross property.

Access, Secondary. A means of vehicular or non-vehicular approach or entry to or exit from property, from a source other than a public street or highway (such as an alley).

Active Recreation. Recreational uses, areas, and activities oriented toward potential competition and involving special equipment. Playgrounds, sports fields and courts, swimming pools, skating rinks, and golf courses are examples of active recreation uses.

Adult. As used in this Ordinance, refers to persons who have attained the age of at least eighteen (18) years.

Adult Bookstore. An establishment having as a substantial or significant portion of its stock in trade, books, magazines, and other periodicals which are distinguished or characterized by their emphasis on matter depicting or describing or relating to "Specified Sexual

Activities" or "Specific Anatomical Areas" (as defined) or an establishment with a segment or section devoted to the sale or display of such material. (See Adult Use requirements.)

Adult Mini Motion Picture Theater. An enclosed building with a capacity of less than fifty (50) persons used for presenting motion pictures, slides, or photographic reproductions distinguished or characterized by an emphasis on matters depicting, describing, or relating to "Specified Sexual Activities: or "Specified Anatomical Areas", (as defined) for observation by patrons therein. (See Adult Use requirements.)

Adult Motion Picture Theater. An enclosed building with a capacity of fifty (50) or more persons used predominately for presenting motion pictures, slides, or photographic reproductions distinguished or characterized by an emphasis on matters depicting, describing, or relating to "Specified Sexual Activities" or "Specified Anatomical Areas", (as defined) for observation by patrons therein. (See Adult Use requirements.)

Agricultural building. For purposes of applying this ordinance, “agricultural building” shall include, but not be limited to, a building, structure or erection used for agricultural purposes as part of an agricultural unit.

Agricultural purposes. See “**Agriculture**.”

Agricultural tourism. Any tourism operation that is directly dependent upon an agricultural operation. Farm tours, pick-your-own operations and wineries are examples of agri-tourism.

Agriculture. The art or science of cultivating the ground, including the harvesting of crops and the rearing and management of livestock.

Alley. A public right-of-way which affords a means of access to garages, parking areas, and garbage bins along the rear edge of abutting lots, not intended for general traffic circulation.

Apartment. A dwelling unit contained in a building comprised of three (3) or more dwelling units, each of which has an entrance to a hallway or balcony in common with at least one (1) other dwelling unit.

Apartment, Commercial. A dwelling unit located in a building where the primary use of the building is a non-residential use.

Appeal. A means for obtaining review of a decision, determination, order, or failure to act pursuant to the terms of this Ordinance.

Applicant. Any individual, firm, corporation, association or partnership, or proprietor of land to undergo land-disturbing activities.

Attic. That part of a building which is immediately below and wholly or partly within the roof framing.

Average Ground Elevation. The average level of the finished surface of the ground at a distance of twenty (20) feet perpendicular from the linear midpoint of the exterior wall or face of each structure or building (or at cardinal directions from each structural support for structures lacking faces), or at the property line, whichever is less.

Basement. Any areas of the building having its floor sub-grade (below ground level) on all sides.

Bed and Breakfast Services. Means a private residence which provides lodging and meals for guests, in which the host or hostess resides.

Bedroom. A room in a residence marketed, designed, or otherwise likely to function primarily for sleeping.

Berm. A mound of earth created for either decorative purposes or functional reasons, such as controlling the flow of water or obscuring undesirable views.

Bufferyard. An area of land together with vegetated buffers, berms, setback or fence that separate different land uses or mitigate a risk associated with land use or structure.

Building. Any structure built for the support, shelter, or enclosure of persons, animals, and moveable property of any kind. Where independent units with separate entrances are divided by common walls, each unit is a building.

Building, Accessory. A detached structure on a property that serves a specific purpose incidental to the principal building. (ie: A garage or storage shed) see Article 4, Division 6.

Building Coverage. That portion of a lot covered by any and all buildings including accessory buildings.

Building Front. That exterior wall of a building which faces the front lot line.

Building Height. The vertical distance as measured from the average ground elevation to the highest point on such building.

Building Line. A line perpendicular to lot depth, which establishes the horizontal distance between the structure and the front property line. (see also lot width)

Building Permit. Written authorization by the Jurisdiction to build a structure in accordance with the codes adopted by the Jurisdiction.

Building, Principal. A building in which is conducted, or in which is intended to be conducted, the main or principal use of the lot on which it is located.

Caliper. A measurement of the size of a tree taken six (6) inches from above the ground level for trees up to and including four (4) inch caliper sizes, and twelve (12) inches above the ground level for larger sizes.

Campgrounds. Commercial, for-profit campgrounds, recreational vehicle parks, or a mix of the two aforementioned uses.

Candlepower. The amount of light that will illuminate a surface one (1) foot distant from a light source to an intensity of one (1) foot-candle.

Candlepower, maximum (peak). The largest amount of candlepower emitted by any lamp, light source, or luminary.

Catering Service. A service providing meals or refreshments for public or private

entertainment for a fee at an off site event.

Certificate of Occupancy. A written certificate that a structure, use or parcel of land is in compliance with the requirements of this Ordinance.

Certified Professional Erosion and Sediment Control Specialist (CPESCS). A specialist in the area of soil erosion and sediment control as certified by the Soil and Water Conservation Society and the International Erosion Control Association.

Child Care Center. A facility providing child care or preschool services for seven or more children, except when the facility is registered as a child development home.

Child Care Facility. A childcare center, preschool, or a registered child development home.

Child Care Home. A person or program providing child care to five or fewer children at any one time that is not registered to provide childcare as authorized under section 237A.3 Code of Iowa. Also In-home Day Care

Child Development Home. A person or program registered under section 237A.3A Code of Iowa that may provide childcare to six or more children at any one time.

Clearing. Removal of unwanted growth, in the form of trees, wood, shrubs, brush, or stumps on a site. Also, grubbing.

Commercial Vehicle. Any motor vehicle used for business or institutional purposes or having painted thereon or affixed thereto a sign identifying a business or institution or a principal product or service of a business or institution. Agricultural equipment used as part of a permitted agricultural principal use shall not be considered as a commercial vehicle.

Comprehensive Plan. The Polk County Comprehensive Plan, Polk 2030 including text and all accompanying maps, charts, and explanatory material adopted by the County and all amendments thereto.

Conservation Easement. A transfer of usage rights — which creates a legally enforceable land preservation agreement between a landowner and a government entity or a qualified land protection organization (often called a "land trust"), for the purposes of conservation by retaining or protecting natural, scenic, or open space values of real property, assuring its availability for agricultural, forest, recreational, or open space use, protecting natural resources, maintaining quality of air, land and water and preserving archaeological, architectural, historical and cultural aspects of real property. It restricts real estate development, commercial and industrial uses, and certain other activities on a property to a mutually agreed upon level.

Conservation subdivision. A development of land that clusters dwelling units, retains more than 50% of stormwater and preserves natural resources that are incorporated into common open spaces.

Construction, Start of. The initiation of grading, filling, excavation, or construction of a site as part of development (now or in the future).

County Attorney. A licensed attorney elected as County Attorney, or appointed by the Governing Body to furnish legal assistance for the administration of this Ordinance.

Crops. For purposes of applying this ordinance, “crops” shall include but not be limited to barley, buckwheat, corn, flax, forage, fruits, honey, legumes, milk, millet, oats, popcorn, rye, sod, sorghum, soybeans, sunflowers, syrup, vegetables, wheat, and grasses used for forage or silage. Crops include products grown as part of tree farms, orchards, or nurseries

(excluding “greenhouses and nurseries, retail”), that do not always produce annual income but require annual operating decisions about maintenance or improvement.

Cutoff. The point at which all light rays emitted by a lamp, light source, or luminaries are completely eliminated (cut off) at a specific angle above the ground.

Cutoff Angle. The angle formed by a line drawn from the direction of light rays at the light source and a line perpendicular to the ground from the light source above which no light is emitted.

Cutoff-Type Luminary. A luminary with elements such as shields, reflectors, or refractor panels which direct and cut off the light at a cutoff angle that is less than ninety (90) degrees.

Dedication. The transfer of property interests from private to public ownership for a public purpose. The transfer may be of fee simple interest or of a less than fee simple interest, including an easement. (By Warranty Deed or Quit Claim Deed)

Design professional. A licensed civil engineer or certified professional erosion and sediment control specialist.

Designated Open Space. Open space that is designed within a cluster, planned or conservation subdivision that incorporates natural resource protection or the preservation of agricultural land.

Developer. A person engaged in development or subdivision.

Development. The alteration of land from its existing state. A man-made change to improved or unimproved real estate, including but not limited to, buildings or other structures, mining, dredging, filling, grading, paving, or excavation operations; or storage of equipment or materials.

Development Pad. The portion of a lot subject to site disruption from construction and/or clearing activities including construction of principal and accessory buildings, drives, storage yards, septic or alternative waste disposal areas, and woodland clearing activities.

Disturbed area. The part of a site on which land-disturbing activities take place. All land area that is to be disturbed at any time during the project is to be counted in determining the disturbed area, even if part of the land will be stabilized before another part is disturbed.

Drainage. The removal of surface water or groundwater from land by drains, grading, or other means. Drainage includes the control of runoff to minimize erosion and sedimentation during and after development and includes the means necessary for water supply preservation or prevention or alleviation of flooding.

Drainage Easement. A right of water drainage to pass in open channel or enclosed structures.

Dwelling. Any building or portion thereof, which is designated or used for residential purposes.

Dwelling, Attached. Two (2) or more adjoining single-family dwelling units, in which each unit has its own front and rear access to the outside, no unit is located over another unit, and each unit is separated from any other unit by one or more non-penetrated vertical common walls.

Dwelling, Single-Family Detached. A dwelling unit designed for and occupied by not more than one (1) family and having no roof, wall or floor in common with any other dwelling unit.

(See Article 4 Division 2 Section 2)

Dwelling, Single-Family Manufactured. A factory built single-family dwelling structure that meets the National Manufactured Home Construction and Safety Standards Act, commonly known as the HUD code.

Dwelling Unit. A room or group of rooms, providing or intended to provide living quarters for not more than one (1) family.

Easement. Recorded authorizations by a property owner for the use by another and for a specified purpose of any designated part of the property.

Engaged in agriculture. For purposes of applying this ordinance, "engaged in agriculture" shall include but not be limited to any of the following:

Inspect agricultural operations periodically and furnish at least half the direct cost of the operations or regularly and frequently make or take an important part in making management decisions substantially contributing to or affecting the success of the agricultural operation or perform physical work, which significantly contributes to the agricultural operation.

Erosion. The wearing away of soil surface by the action of wind, water, ice, gravity or other geological, natural, or manmade agents or any combination thereof.

Erosion Control. A measure, structure, or device, which contains or stops the erosion of soil material within the land area of a development.

Essential Services. Facilities owned or maintained by public utility companies or public agencies, located in public ways or in easements provided for the purpose, or on a customer's premises and not requiring a private right-of-way, and reasonably necessary for the furnishing of adequate water, sewer, gas, electric, communication, or similar services to adjacent customers; and not including any cross-country line on towers or in a private right-of-way.

Exterior Storage. Outdoor storage of fuel, raw materials, products, and equipment.

Family. One (1) or more persons related by blood, marriage, adoption, or guardianship, or not more than three (3) persons not so related, occupying a dwelling unit and living as a single housekeeping unit. This does not include a group home.

Farmhouse. For purposes of applying this ordinance, "farm house" shall include but not be limited to a house located on land operated as a farm, which is or will be occupied by a person engaged in agriculture on that same unit, or by a person retired from agriculture that was performed on that unit of which the house is a part. The house and the land comprising the agricultural unit do not necessarily need to be contiguous.

Farm outbuilding. See" **Agricultural building**."

Farmland. A parcel of land used for agricultural activities. Also defined in the State Code of Iowa, Chapter 352 (County land Preservation and Use Commissions) as those parcels of land suitable for the production of farm products.

Farm Stand. A temporary structure or vehicle used in the sale of farm products such as fruits, vegetables, and juices.

Filling. The depositing on land, whether submerged or not, of sand, gravel, earth, stone, brick, or similar materials. Biodegradable materials and other materials subject to

decomposition, significant settling or environmental damage (such as garbage, tires and other organic matter) are not classified as and may not be used as fill materials.

Fill material. Soil, stone, rock, brick, Portland cement or sand.

Fill site. Land upon which fill materials are placed and which placement does not require a Sanitary Disposal Permit issued by the State of Iowa.

Final stabilization. All land-disturbing activities at the site have been completed, and that a uniform perennial vegetative cover with a density of 70 percent for the area has been established or equivalent stabilization measures have been employed.

Firearms Operations. Firearms Operations are any uses that include the firing, shooting or any other discharge of firearms, explosives and all weapons, except those uses or activities specifically excepted below. Firing ranges, shooting ranges, and weapons ranges, either inside of a building or outside, are examples of firearms operations. Exceptions to this definition are governmental uses; performing military operations for the government; discharging firearms while legally hunting; agricultural uses; the discharge of firearms for purposes of athletic events, theater or other performing arts; any special event granted prior approval by the County for the discharge of firearms; the legal discharge of explosives for approved construction and mining projects; and licensed, legally used fireworks displays.

Floodplain Development Permit. Written authorization by the Jurisdiction to develop in a floodplain in accordance with process adopted by the Jurisdiction.

Floor Area. The sum of the gross horizontal area of a building or structure from the exterior face of exterior walls multiplied by the number of floors.

Floor Area Ratio. An intensity measured as a ratio derived by dividing the total floor area of a building or structure by the base site area.

Footcandle. A unit of illumination produced on a surface, all points of which are one (1) foot from a uniform point source of one (1) candle.

Forest. An area of one acre or more containing mature woodlands and/or young woodlands.

Garage. A building, or part thereof, used or intended to be used for the parking and storage of motor vehicles.

Garden Center. A place of business where retail and wholesale products and produce are sold to the retail consumer.These centers, which may include a nursery and/or greenhouses, import most of the items sold. Items offered for sale may include plants, nursery products and stock, fertilizers, potting soil, hardware, power equipment and machinery, hoes, rakes, shovels, and other garden and farm tools.

Garden Plot. An area established for the growing of food for home use. Such areas may be owned by an individual, community association, homeowners' association, or agency.

Gas Station. An establishment providing sales of vehicle fuel and such services as lubrication, oil and tire changes, and minor repairs. This use does not include auto body repair or paint spraying.

Greenhouse. An enclosed building, permanent or portable, which is used for the growth of plants.

Gross Density (GD). The quotient of the total number of dwelling units divided by the base

site area of a site.

Group Home. A community-based residential home that is licensed as a residential care facility under Iowa Code Chapter 135C or as a child foster care facility under Iowa Code Chapter 237 to provide room and board, personal care, habilitation services, and supervision in a family environment exclusively for not more than eight persons with a developmental disability or brain injury and any necessary support personnel. A group home does not mean an individual foster family home licensed under Iowa Code Chapter 237.

Height of Structure. The vertical distance measured from the average ground elevation to the highest point on such structure, excluding chimneys, communication towers, ornamental towers and spires, and necessary mechanical appurtenances, which do not exceed 30 feet in height above the highest point of the structure.

Home Occupation. Any occupation, profession, activity or use carried out by a resident with the intention for economic gain in the resident's own dwelling unit and/or accessory structure located on the property. The home occupation must be clearly subordinate to the residential or agricultural use of the property.

Hotel. A building or group of buildings containing individual rooms or suites of rooms, each having a private bathroom, for the purpose of providing overnight lodging facilities to the general public for compensation with or without meals, and which has common facilities for reservations and cleaning services and on-site management.

Illegal Split. A parcel that was created that did not meet the Polk County Zoning Ordinance and/or Subdivision Ordinance requirements in effect at the time the parcel was created.

Impervious Surface. Impervious surfaces are those, which do not absorb water. They consist of all buildings, parking areas, driveways, roads, sidewalks, and any areas of concrete or asphalt or similar material.

Inoperable Vehicle. Any motor vehicle, recreational vehicle, boat, trailer or semi trailer which lacks a current registration or which lacks a vehicle part, the absence of which renders the vehicle illegal for use, or incapable of operation, on public highways.

Junk. Shall include, but not limited to, all old or scrap copper, brass, lead, or any other nonferrous metal; old rope, rags, batteries, paper, trash, rubber, debris, waste, used lumber or salvaged wood; dismantled or inoperable vehicles, machinery and appliances or parts of such vehicles, machinery or appliances; iron, steel, or other old or scrap ferrous material; old or discarded glass, tin ware, plastic, or old or discarded household goods or hardware.

Junkyard. Any place not fully enclosed in a building and which encompasses an area of 200 square feet or more, used in whole or in part for the storage, salvage or deposit of junk or used lumber whether in connection with a business or not, or any place where more than two (2) inoperable vehicles, or used parts and materials thereof which exceed 240 cubic feet, are stored or deposited. For the purposes of this Ordinance, junkyard shall include

salvage yard, wrecking yard, used lumberyard and places for storage of salvaged wood.

Jurisdiction. Polk County, Iowa.

Jurisdiction Engineer. A licensed engineer designated by the Governing Body to furnish engineering assistance for the administration of this Ordinance.

Jurisdiction Land Surveyor. A licensed land surveyor designated by the Governing Body to furnish land surveying assistance for the administration of this Ordinance.

Kennel. A building, structure or use where four (4)or more dogs, cats or other small domesticated animals are kept for sale, breeding or boarding.

Land-disturbing activities. Clearing, grading, excavating, filling, or removal of vegetation, paving, or buildings, exposing earthen material on a site.

Landscape Surface Area. Surface area of land not covered by any impervious surface that is maintained to support plant life.

Landscape Surface Ratio. The ratio derived by dividing the landscaped surface area by the base site area.

Livestock. For purposes of applying this ordinance, “livestock” shall include but not be limited to animals or fowl, which are being produced primarily for sale or use as food or food products, such as: cattle, pigs, sheep, goats, poultry, birds, fish, horses, donkeys, mules, and farm deer as defined in Iowa Code 481A.1.

Lot. A parcel of land having fixed boundaries and identified by number or letter designation on a survey or subdivision plat.

Lot Depth. The distance measured along the perpendicular bisector of the smallest possible rectangle enclosing the lot.

Lot Area. The area contained within the boundary lines of a lot excluding easements for publicly dedicated or accepted rights-of-way.

Lot, Corner. A lot abutting two (2) or more streets at their intersection.

Lot Frontage. Width measured at the street lot line. When a lot has more than one (1) street lot line, lot width shall be measured, and the minimum lot width required by this Ordinance shall be provided, at each such line.

Lot Line. A line bounding a lot, which divides one lot from another or from a street.

Lot Line, Front. In the case of a lot abutting only one (1) street, it is the property line or street right-of-way line separating such lot from such street. In the case of a double frontage lot, each property line or street right-of-way line separating such lot from a street shall be considered to be the front lot line.

Lot Line, Rear. For rectangular or most trapezoidal shaped lots, that lot line which is parallel to and most distant from the front lot line of the lot; in the case of an irregular, triangular, or gore-shaped lot, a line twenty (20) feet in length, entirely within the lot, parallel to and at the maximum possible distance from, the front line shall be considered to be the rear lot line. In the case of lots which have frontage on more than one road or street, the rear lot line shall be opposite the lot line along which the lot takes access to a street. In the case where the lot does not abut a street, the rear lot line shall be the lot line farthest from the closest street and generally parallel to it, with a minimum width of 20 feet. In the case where access is taken off of a future road stub or access easement then the rear lot line will

be the yard opposite the existing street frontage. In the case where the rear lot line is identified on a recorded subdivision plat then refer to plat for rear yard designation.

Lot Line, Side. Any lot line other than a front or rear lot line.

Lot of Record. Any validly recorded lot which at the time of its recording complied with all applicable laws, Ordinances or regulations.

Lot Width. The mean width measured at right angles to its depth at the building line.

Luminary. A complete lighting unit consisting of a light source and all necessary mechanical, electrical, and decorative parts.

Maintenance Bond. A financial guarantee of facilities or work to ensure the correction of any failures of any improvements required pursuant to this Ordinance, or to maintain same.

Massage. Any method of treating the external parts of the human body by rubbing, stroking, kneading, tapping or vibrating with the hand or any instrument for any form of consideration or gratuity.

Massage Establishment. Any establishment having a fixed place of business where massages are administered for any form of consideration or gratuity, including but not limited to massage parlors, health clubs, sauna baths, and steam baths. This definition shall not be construed to include: (1) persons licensed by the State of Iowa under the provisions of Chapters 148, 148A, 148B, 150, 150A, 151, 152, 157, or 158 of the Iowa Code, when performing massage therapy or massage services as part of the profession or trade for which licensed; (2) persons performing massage therapy or massage services under the direction of a person licensed as described in (1) herein above; (3) persons performing massage therapy or massage services upon a person pursuant to the written instructions of a licensed physician; (4) nurse's aides, technicians and attendants at any hospital or health care facility licensed pursuant of Chapter 135B, 135C, or 145A of the Iowa Code, in the course of their employment and under the supervision of the administrator thereof or of a person licensed as described in (1) herein above; (5) an athletic coach or trainer (i.) in any accredited public or private secondary school, junior college, college or university, or (ii.) employed by professional or semi-professional athletic team or organization, in the course of their employment as such coach or trainer. This definition shall not be construed to include a volunteer fire department, a volunteer rescue squad or a nonprofit organization

operating a community center, swimming pool, tennis court, or other educational, cultural, recreational, and athletic facilities, and facilities for the welfare of the residents of the area.

Maximum Permitted Illumination. The maximum illumination measured in footcandles at the interior bufferyard line at ground level.

Minimum Floor Elevation. The lowest elevation permissible for the construction, erection, or other placement of any floor, including basement floor(s) and cellar floor(s).

Mini-Warehouse. A building or group of buildings in a controlled access and fenced compound that contains varying sizes of individual, compartmentalized, and controlled-access stalls or lockers for the storage of a customer's goods or wares.

Minor Vehicle Repair. This activity includes lubrication, oil and tire changes and engine repairs which are done completely inside a structure.

Mobile Home. Any factory built structure without motive power so manufactured or constructed as to permit it to be conveyed upon the public streets and highways.

Mobile Home Park. A mobile home park is a planned development containing mobile homes placed on lots specifically designed for them.

NAICS. The North American Industry Classification System (current edition) the industry classification system as provided by the Office of Management and Budget (OMB) United States Government.(US Census Bureau)

Nonconforming Structure. Any building or structure, legally established prior to the effective date of this Ordinance or subsequent amendment to it, which does not fully comply with the standards imposed by the individual sections of this Ordinance.

Nonconforming Use. An activity using land, buildings, signs, and/or structures which were legally established prior to the effective date of this Ordinance or subsequent amendment to it and which would not be permitted to be established as a new use in a zone in which it is located by the regulations of this Ordinance.

On-Site. Located on the lot in question, except in the context of on-site detention, when the term means within the boundaries of the development site as a whole.

Open Space. All lands not occupied by buildings or paving. Open space represents many different elements in the landscape, including lawns, pathways/walkways, wooded areas, fields, and natural areas.

Open Space Ratio. The proportion of a site consisting of open space.

Outlot. A platted parcel of land not to be used for building purposes, may be set aside for future development and subdividing or open space.

Owner. The person or persons having the right of legal title to, beneficial interest in, or a contractual right to purchase a lot or parcel of land.

Pad, Development. The area of a lot within a residential development which is devoted to structures, drives and septic systems.

Passive Recreation. Recreational uses, areas, or activities oriented to noncompetitive activities. Passive recreation areas are not generally maintained by mowing and are left in their natural vegetative state. Bicycle riding, hiking, and bird watching are examples of

passive recreation activities.

Performance Bond. A financial guarantee to ensure that all improvements, facilities, or work required by this Ordinance will be completed in compliance with the Ordinance, regulations, and the approved plans and specifications of a development.

Predeveloped Condition. All the natural storage areas and drainageways plus existing farm drainage tiles and highway drainage structures and the analysis shall include hydraulic and hydrologic site characteristics existing prior to the development being proposed.

Picnic Area. An area specifically designed for providing facilities for picnicking activities. Facilities may include picnic tables, grills, outhouses, and shelters.

Planned Development. A development that contains a minimum amount of common open space and uses one (1) or more of a variety of dwelling unit types.

Public Improvement. Any drainage ditch, roadway, parkway, sidewalk, pedestrian way, tree, lawn, off-street parking, lot improvement, or other facility for which the jurisdiction may ultimately assume the responsibility for operation or maintenance, or which may affect an existing improvement the jurisdiction established, maintains or operates.

Public Service. Any facility or service provided by the local or federal government, or duly authorized by the State of Iowa, to provide services to the general public.

Public Project. Any local, state or federal government utility that is being built and funded (in full or in part) by a government authority.

Public Sanitary Sewer. Includes sanitary sewer systems other than individual on-site systems approved by the State or County and maintained by a public agency authorized to operate such systems.

Regional Sewer. A sewer system operated by the Wastewater Reclamation Authority (WRA).

Responsible party. One or more persons who have applied for or hold a Grading Permit, or who own, control, or perform work on a site.

Restaurant, Fast Food. An establishment whose principal business is the sale of food and/or beverages in a ready-to-consume state for consumption (1) within the restaurant building, (2) within a motor vehicle parked on the premises, or (3) off the premises as carry-out orders, and whose principal method of operation includes the following characteristics: food and/or beverages are usually served in disposable containers.

Restaurant, Standard. An establishment whose principal business is the sale of food and/or beverages to customers in a ready-to-consume state, and whose principal method of operation includes one (1) or both of the following characteristics: (1) customers, normally provided with an individual menu, are served their foods and beverages by a restaurant employee at the same table or counter at which food and beverages are consumed; (2) a cafeteria-type operation where food and beverages generally are consumed within the restaurant building.

Right-of-way. A strip of land occupied or intended to be occupied by a street, alley, crosswalk, railroad, utility line, pipeline, or for any other special use. Right-of-way as shown on a plat is separate and distinct from a lot or parcel and not included within the dimensions of such parcel; that is dedicated for public use by the Developer.

Rooming House. A dwelling where lodging is provided, for compensation, for from four (4)

to ten (10) persons, who are not members of the owner's family occupying that dwelling unit and who do not occupy the dwelling as a simple housekeeping unit. Considered a commercial lodging use.

Sediment. Solid material, both natural and manmade, that is in suspension, has been transported, or has been moved from its origin by air, water, gravity, or ice and has been deposited by the action of water or wind.

Sexual Activity Establishment. An establishment used for the display of live presentations distinguished or characterized by an emphasis on matter depicting or describing or relating to specified sexual activities or specified anatomical areas (as described by this Ordinance, below). The provisions of this definition shall not apply to a theater, concert hall, art center, museum or similar establishment which is primarily devoted to the arts or theatrical performance and which is not primarily devoted to presentations distinguished or characterized by an emphasis on matter depicting or describing or relating to specified sexual activities or specified anatomical areas.

Shopping Center. A group of commercial establishments planned, developed, and managed as a unit with off-street parking provided on the property.

Sign. Any object, device, display, structure, or part thereof, situated outdoors or indoors, which is used to advertise, identify, display, direct or attract attention to an object, person, institution, organization, business, religious group, product, service, event, or location by any means, including words, letters, figures, designs, symbols, fixtures, colors, illumination, or projected images. Signs do not include the flag or emblem of any nation, organization of nations, state, city, religious, fraternal, or civic organization; also merchandise and pictures or models of products or services incorporated in a window display, works of art which in no way identify a product, or score boards located on athletic fields.

Sign, Directional. An off-site sign providing directions to governmental facilities, hospitals, colleges, schools, and churches and permitted commercial uses.

Sign, Development. A freestanding sign identifying the name of residential, commercial or industrial project or development

Sign, Electronic Message. A sign, or portion thereof, that displays electronic, static images, static graphics or static pictures, with or without textual information. Such a sign can be changed or altered by electronic means on a fixed display screen composed of a series of lights including light emitting diodes (LED's), fiber optics, lights bulbs, or other illumination devices within the display area where the message is displayed.

Sign, Freestanding. A self-supporting sign located on or supported by poles or base on the ground.

Sign, Graphic. An integral part of a building façade that may be painted or carved or applied permanently on the façade of the building and do not contain any text pertaining to the business or products sold on the premises.

Sign, Marquee. Non-electronic changeable copy signs used to announce special events or information.

Sign, Memorial. A sign, plaque, statue, marker, or monument memorializing a person, historical event, or building that does not provide commercial advertisement.

Sign, Off-site. A billboard identifying or directing attention to a profession, business, service, activity, product, campaign or attraction manufactured, sold, offered or conducted

at a location other than upon the premises where such sign is located, and/or (b) the ideological or noncommercial views of a party who is not an occupant of the premises.

Sign, Portable. A temporary sign placed on a property for a limited time period providing information about a product, good or service relating to use located on the property.

Sign, Wall. A sign mounted parallel to a building.

Site Plan. A graphic depiction of features on a parcel proposed for development including topography, existing and proposed structures, paved areas, ingress/egress points, and landscaped areas.

Specified Anatomical Areas. As used in this Ordinance is defined as one or more of the following: (1) less than completely and opaquely covered (a) human genitals, (b) pubic regions, or (c) female breasts below a point immediately above the top of the areola; or (2) human male genitals in a discernable turgid state, even if completely and opaquely covered.

Specified Sexual Activities. As used in this Ordinance is defined as one or more of the following: (1) human genitals in a state of sexual stimulation or arousal; (2) acts of human masturbation, sexual intercourse or sodomy; (3) fondling or other erotic touching of human genitals, pubic region, buttocks or female breasts.

Stable, Commercial. A building or land where horses are kept for remuneration, hire, sale, boarding, riding, or show.

Stable, Private. Any building, incidental to an existing residential, principal use that shelters horses for the exclusive use of the occupants of the premises.

Stabilization. Vegetative cover with a density of 70 percent has been established, or equivalent stabilization measures have been employed.

Stormwater drainage system. All manmade facilities and structures and all natural watercourses that are owned by the County, or that are within a drainage easement owned by the County, and that are used for collection, storage, treatment, and conveyance of stormwater from any area, through any area. This includes without limitation all stormwater facilities, canals, creeks, curb and gutter, dams, ditches, floodwalls, flumes, gulches, gullies, levees, ravines, siphons, streams, streets, and swales. For the purpose of illicit discharge regulation, any discharge to an area tributary to the stormwater drainage system shall be treated as a discharge to the stormwater drainage system. The stormwater drainage system does not include the Des Moines River.

Stormwater facilities. Anything built or used for the control of stormwater, including without limitation catch basins, channels, culverts, detention basins, energy dissipation structures, inlets, manholes, outlets, pipes and other conduits, retention basins, and roadways and gutters.

Stormwater Pollution Prevention Plan (SWPPP). A plan that describes existing and future storm water conditions, and the activities and measures to be undertaken to control soil erosion and prevent pollution conforming to the requirements contained in NPDES General Permit No. 2**.**

Stream Protection Area. Any and all land and vegetation within the undisturbed buffer and impervious surface setback.

Street. A right-of-way, dedicated as public property for public use serving more than one ownership, which provides principal vehicular and pedestrian access to adjacent properties.

The term street may be used synonymously with road or roadway.

Street, Arterial. A street intended to move through traffic to and from major activity centers within the community, and/or a route for traffic between communities or neighborhoods which may have limited access and which carries large volumes of traffic. Also, Arterial or Major Arterial or Minor Arterial or Other Principal Arterial.

Street, Collector. A street intended to move traffic from local streets to an arterial street. A collector street serves a neighborhood or large subdivision. Also, Collector or Major Collector or Minor Collector.

Street, Expressway/ Freeway. A street for through traffic, in respect to which owners or occupants of abutting property and other persons have no legal right to access to or from the same, except at such points and in such manner as may be determined by the public authority having jurisdiction. Also Expressway, Freeway or Interstate.

Street, Local. A street whose primary function is to provide access to abutting properties and to other streets from individual properties.

Street, Public. A street owned and maintained by a governmental organization.

Structural Alteration. Any change in the supporting members of a building, such as the bearing walls, beams, or girders, or any change in the dimension or configuration of the roof or exterior walls.

Structure. Anything that is built or constructed, a building of any kind, or any piece of work artificially built up or composed of parts joined together in some definite matter.

Subdivision. A division of a parcel of land into lots, building sites, or other divisions for the purpose of sale or building development (whether immediate or future).

Swale. A linear depression in land's surface in which stormwater runoff would collect and form a temporary watercourse.

Swimming Pool. A “swimming pool’ is an outdoor artificial basin of water of either temporary or permanent construction, whether above or below ground, capable of containing water of a depth of eighteen inches or more, and which is not emptied within a 24 hour period. Swimming pools exclude man-made lakes, or ponds created through the collection of storm water or drainage runoff, and hot tubs equipped with a latching cover.

Top of Bank. Intersecting point between the stream channel and the break in the stream bank slope or the highest point of the stream channel.

Tree, Canopy. A tree that would occupy the upper canopy of a forest in a natural ecological situation. These trees are often referred to as shade trees.

Tree, Understory. A tree that would occupy the understory of a forest in a natural ecological situation. These types of trees are often referred to as ornamental trees.

Undisturbed Stream Buffer. A naturally vegetated strip of land where no improvements shall take place or have been made and which lies adjacent to a stream, river, or lake and provides such functions as protecting water quality, providing wildlife habitat, and storing

flood waters.

Use, Accessory. A use incidental to and customarily associated with a specific principal use, located on the same lot or parcel.

Use, Conditional. A use which, because of special problems of control the use presents, requires reasonable, but special, unusual, or extraordinary limitations peculiar to the use for the protection of the public welfare and the integrity of the comprehensive plan.

Use, Existing. A land use which, prior to the effective date of this ordinance, is: completed; under construction; or permitted by Polk County.

Use, Principal. The specific primary purpose for which land or structure is designed, arranged, or intended, or to which purpose land or structure is occupied, maintained, leased, or operated.

Use, Temporary. Those land uses and structures that are needed or are in place for only short periods of time.

Variance. To authorize upon appeal by the Board of Adjustment in specific cases, such variance from the terms of this ordinance as will not be contrary to the public interest, where owing to special conditions a literal enforcement of the provisions of the ordinance will result in unnecessary hardship, and so that the spirit of the ordinance shall be observed and substantial justice done.

Yard. The space between a lot line and building.

Yard, Front. A yard extending the full width of the front of a lot between the front lot line and the front building line.

Yard, Rear. A yard extending the full width of the lot in the area between the rear lot line and the rear building line.

Yard, Side. A yard extending the full length of the lot in the area between a side lot line and a side building line.

Yard, Street. A yard extending the full width of the lot in the area between a lot line abutting a street right-of-way and a building line.

Zoning Administrator. An individual designated by the Board of Supervisors to enforce the requirements of this Ordinance.

Zoning Map. The map showing the location and boundaries of the zoning districts established by this Ordinance. The map is entitled, "Official Zoning Map, Polk County, Iowa."

Section 2. Abbreviations

The following abbreviations are used in this Ordinance and are intended to have the following meanings:

AC acre
ANSI American National Standards Institute
BC building coverage
BOA Polk County Board of Adjustment
BOS Polk County Board of Supervisors (Board)
CUP Conditional use permit
CSR Corn Suitability Rating
FAA Federal Aviation Administration
FAR floor area ratio
FCC Federal Communications Commission
FEMA Federal Emergency Management Agency
FT feet
DNR Iowa Department of Natural Resources
GD gross density
GIS Geographic Information System
HUD Federal Department of Housing and Urban Development
MWA Metro Waste Authority
NPDES National Pollutant Discharge Elimination System
NRCS Natural Resources Conservation Service
OSR open space ratio
SF square feet
SUDAS Statewide Urban Design and Specification
SWPPP Storm Water Pollution Prevention Plan
ROW Right-of-way

Article 3. Establishment of Zoning Districts

The unincorporated areas of Polk County, Iowa are hereby divided into zoning districts of such number and character as are necessary to achieve compatibility of uses within each district; to implement the Polk 2030 Comprehensive Land Use Plan; and to achieve the other purposes of this Ordinance.

Division 1. Zoning Districts

For the purpose of this Ordinance, all land and water areas in the County are hereby divided into zoning districts, which shall be designated as follows:

AG – Agricultural District
AT – Agricultural Transition District
ER – Estate Residential District
RR – Rural Residential District
LDR – Low Density Residential District
MDR – Medium Density Residential District
HDR – High Density Residential District
MU – Mixed Use District
NB – Neighborhood Business District
GC – General Commercial District
LI – Light Industrial District
HI – Heavy Industrial District
MH – Mobile Home Park District
OS – Open Space District

Division 2. Map of Zoning Districts

Zoning districts established by this Ordinance are bounded and defined as shown on the Official Zoning Map of Polk County, which, together with all explanatory materials contained thereon, are hereby made a part of this Ordinance.

Section 1. Interpretation of District Boundaries

The following rules shall be used to determine the precise location of any zone boundary shown on the Official Zoning Map of Polk County:

(A) Boundaries shown as following or approximately following the limits of any municipal corporation shall be construed as following such limits.

(B) Boundaries shown as following or approximately following streets shall be construed as following the centerlines of such streets.

(C) Boundary lines shown as following or approximately following platted lot lines or other property lines as shown on the Polk County Auditor's parcel data shall be construed as following such lines.

(D) Boundaries shown as following or approximately following the centerlines of streams, rivers, or other continuously flowing water courses shall be construed as following the channel centerline of such water courses and, in the event of a natural change in the location of such streams, rivers, or other water courses, the zone boundary shall be construed as moving with the channel centerline.

(E) Boundaries shown as following or approximately following ridgelines or watersheds shall be construed as following such ridgelines or watersheds.

(F) Boundaries shown as separated from, and parallel or approximately parallel to, any of the features listed in paragraphs A. through E. above, shall be construed to be parallel to such features and at such distances there from as are shown on the Map.

Division 3. Descriptions and Intent of Zoning Districts

The following sections specify the purpose and intent of the zoning districts established by this Ordinance.

Section 1. Rural Districts

The rural districts are intended to preserve or encourage the continuation of agricultural uses and agricultural land. There are three rural districts: an Agricultural District (AG) designed to preserve agriculture, Agricultural Transition (AT) which encourages the continuation of agriculture understanding that the area will most likely develop in the future with the extension of public water and sanitary sewer, and an Estate Residential District (ER) which allows for housing at a density to retain their basic rural character.

(A) Agricultural District – AG

This district is intended to preserve and protect areas of Polk County that are presently predominantly in agricultural use and which are not needed to accommodate the County's growth until after the year 2030. These areas contain soils that are predominantly prime agricultural soils. This district is designed to protect the agricultural land allowing only scattered residential dwellings that mostly serve the agricultural uses. This area shall be last in priority for rezoning to accommodate growth in the future. The Agricultural designation also ensures the continuation of the rural character of these areas of the County.

(B) Agricultural Transition District – AT

The Agricultural Transition area is intended to avoid premature subdivision of areas contiguous to growing cities. The ultimate development of the area involves extension of urban services and likely annexation. It is anticipated that most Agricultural Transition areas will not be annexed and developed at urban densities during the time frame of this plan. However, many of these areas will be served with sanitary sewer within this time frame, and the Agricultural Transition district is needed to prevent leapfrog development and premature annexation.

(C) Estate Residential District – ER

This district is intended to provide for low-density single family residential development at a density of approximately one (1) unit per three (3) acres served by on-site septic systems. The district permits conservation (cluster) developments to protect and preserve natural resources. The district emphasis is based on retaining natural features and continuing the rural character of the County.

Section 2. Residential Districts

These districts are intended to provide, a range of housing opportunities to encourage and direct the future growth of Polk County. The districts represent a critical element of the County's growth management program. They are intended to provide for a range of densities with urban services and provide for rural development without public water or sanitary sewer service.

(A) Rural Residential District – RR

This district is intended to provide for low density single family development served by septic systems and supplied with public water in unincorporated Polk County at a density of approximately 1 unit per acre. Clustered and planned developments are permitted and will have substantial open spaces.

(B) Low Density Residential District – LDR

This district is intended to provide for additional development in areas where the development pattern is already suburban in character. The full development of the site will most likely not occur until public water and public sewer is available. The District permits development at densities of approximately three (3) single family units per acre with allowances for planned developments with specific areas of open space. The location of some of this district is around the edges of the growing cities, and indicates areas that are likely to be annexed during the time period of the 2030 Comprehensive Plan and under most circumstances not to be developed prior to annexation.

(C) Medium Density Residential – MDR

This district is intended to accommodate medium-density housing that will be served by public utilities. Housing types include both small lot single-family development and attached housing types. The district is located around the edges of the growing cities, where it recognizes this development type within municipal land use plans and locations in the North Central unincorporated areas where neighborhood infill and revitalization is expected. The district permits development at densities of approximately 5 units per acre for single-family development. Attached housing densities will typically range from 8 to 15 units per acre. The location of much of this district is in locations likely to be annexed during the time period of the 2030 plan.

(D) High Density Residential – HDR

This district is intended to accommodate high-density housing that will be served by public utilities. It is located around the edges of the growing cities, where it recognizes this development type within municipal land use plans. The location of this district is primarily around the edges of the growing cities, and indicates areas that are likely to be annexed during the time period of this plan.

(E) Mobile Home Park District – MH

The purpose of this district is to provide for mobile home parks subdivisions. A mobile home park is a planned subdivision containing mobile home lots for sale or for rent. Without public utilities existing parks are not expected to be expanded and new areas are not expected to be rezoned for such development. Mapping of this district will be through rezoning of property for this district.

Section 3. Mixed Use District

The MU (Mixed Use District) is intended to accommodate a mix of medium and high-density housing and complementary office and commercial uses that will be served by public utilities, as well as recognizing existing areas developed with a mix of residential, commercial and industrial uses. The district is located around the edges of the growing cities, where it recognizes this development type within municipal land use plans. It also is planned for locations in the North Central unincorporated areas where neighborhood infill and revitalization is recommended.

Section 4. Commercial Districts

These districts are intended to accommodate a mix of commercial and office uses in neighborhoods and along existing commercial corridors.

(A) Neighborhood Business District – NB

This district is intended for limited commercial uses, office, service development, at a scale that serves the immediate neighborhood rather than a highway corridor or larger region. This category encompasses older commercial nodes and new areas that may be developed to serve new residential development.

(B) General Commercial District– GC

This district is intended for retail, office, service development, along with limited production in some settings. This category will apply primarily to existing commercial corridors along major highways or new commercial nodes proposed around the edges of cities in municipal land use plans.

Section 5. Industrial Districts

These districts are intended to accommodate the industrial uses for Polk County in settings in and around existing industrial uses in most circumstances not adjacent to residential districts.

(A) Light Industrial District – LI

The Light Industrial District is designed for commercial and light industrial uses with limited outdoor storage. This district is located adjacent to accessible transportation corridors, particularly in regard to the vicinity of existing or planned access points. Uses may include special trade contractors, warehousing, trucking facilities and other light industrial uses

(B) Heavy Industrial District – HI

This district is intended to permit moderate and heavy industrial uses including manufacturing sites, construction contractors and other uses with possible large areas of outdoor storage. The development within this district is intended for industrial development to provide jobs to allow for access and movement of goods and services near interstate interchanges. This district is specifically intended to encourage job creation in areas that will be provided with full municipal services. Uses permitted in this district include commercial and industrial uses.

Section 6. Open Space District

The OS (Open Space District) is established to create a classification that identifies public land. This district includes regional county parks, and other county, state and federal owned land specifically the areas of Saylorville Lake, Big Creek, Chichaqua, and the back up water flood areas of Red Rock Lake in the southeast part of the County. This district is intended to remain open space for passive and active recreational purposes. The uses permitted within this district are limited to uses associated to the recreational facilities provided in these areas.

Article 4. Use Regulations

Division 1. Purpose

The purpose of this Division is to indicate which land uses may locate in each zoning district and which uses may not locate therein. A further distinction is made for uses which may locate in a given district only upon obtaining a Conditional Use Permit to do so. The uses permitted in each district are specifically designated in Table 4.1. The uses are specifically described in Division 4. Other than by zoning change, no use which is expressly prohibited shall be built in a district. The Zoning Administrator, however, shall have the discretion to permit uses which are not specifically listed but are similar to uses that are expressly permitted in Article 4, in accordance with the procedures of interpretations.

Division 2. Table of Uses

Key to Table 4.1		
Y=Permitted by right	**N=Not Permitted**	**C= Permitted Only by Conditional Use Permit (granted by the Polk County Board of Adjustment)**

Table 4.1 Table of Uses

	General Use	Zoning Districts													
		AG	AT	ER	RR	LDR	MDR	HDR	MU	NB	GC	LI	HI	MH	OS
	Agricultural														
A	Farms	Y	Y	Y	Y	Y	Y	Y	Y	Y	Y	Y	Y	Y	Y
B	Intensive Ag	Y	N	N	N	N	N	N	N	N	N	N	N	N	N
C	Forestry	Y	Y	Y	Y	Y	Y	Y	Y	Y	Y	Y	Y	Y	Y
D	Nurseries- Indoor	Y	Y	N	N	N	N	N	C	N	Y	Y	Y	N	N
E	Nurseries- Outdoor	Y	Y	Y	Y	Y	Y	Y	Y	Y	Y	Y	Y	N	N
	Residential														
A	Single-Family	Y	Y	Y	Y	Y	Y	Y	Y	N	N	N	N	N	N
B	Cluster	Y	Y	Y	Y	Y	Y	Y	N	N	N	N	N	N	N
C	Planned	N	N	Y	Y	Y	Y	Y	Y	N	N	N	N	N	N
D	Mobile Homes	N	N	N	N	N	N	N	N	N	N	N	N	Y	N
E	Commercial Apts.	N	N	N	N	N	N	N	Y	Y	Y	N	N	N	N
	Institutional														
A	Outdoor Institutional	Y	Y	Y	Y	Y	Y	Y	Y	Y	Y	Y	Y	N	Y
B	Indoor Institutional	C	C	C	C	C	C	C	Y	Y	Y	Y	Y	N	C
C	Institutional Residential 1-8 residents	N	N	N	Y	Y	Y	Y	Y	N	N	N	N	N	N
D	Institutional Residential more than 8 residents	N	N	N	C	C	C	C	C	N	N	N	N	N	N
E	Group Home	Y	Y	Y	Y	Y	Y	Y	Y	N	N	N	N	Y	N
F	Public Service	Y	Y	Y	Y	Y	Y	Y	Y	Y	Y	Y	Y	Y	Y
G	Cemeteries	C	C	C	C	C	N	N	N	N	N	N	N	N	N

	General Use	Zoning Districts													
		AG	AT	ER	RR	LDR	MDR	HDR	MU	NB	GC	LI	HI	MH	OS
	Commercial														
A	Agri-tourism	C	C	C	C	C	N	N	C	N	C	C	C	N	N
B	Convenience Commercial	N	N	N	N	N	N	N	Y	Y	Y	Y	Y	N	N
C	Office	N	N	N	N	N	N	N	Y	Y	Y	Y	Y	N	N
D	Commercial Retail	N	N	N	N	N	N	N	Y	Y	Y	Y	Y	N	N
E	Heavy Retail/Services	N	N	N	N	N	N	N	Y	N	Y	Y	Y	N	N
F	Services	N	N	N	N	N	N	N	Y	Y	Y	Y	Y	N	N
G	Restaurant	N	N	N	N	N	N	N	Y	Y	Y	Y	Y	N	N
H	Commercial Lodging	N	N	N	N	N	N	N	Y	Y	Y	Y	Y	N	N
I	Ag. Support	Y	N	N	N	N	N	N	C	N	C	Y	Y	N	N
J	Home Occupations	Y	Y	Y	Y	Y	Y	Y	N	N	N	N	N	N	N
K	Camp Grounds	C	N	N	N	N	N	N	N	N	N	N	N	N	C
L	Communication Towers	C	C	C	C	N	N	N	C	N	C	C	Y	N	C
M	Adult Uses	N	N	N	N	N	N	N	N	N	Y	Y	Y	N	N
N	Outdoor Commercial Amusement	C	N	N	N	N	N	N	C	C	C	C	C	N	N
O	Indoor Comm. Amusement	N	N	N	N	N	N	N	Y	Y	Y	Y	Y	N	N
P	Gasoline Stations	N	N	N	N	N	N	N	Y	Y	Y	Y	Y	N	N
Q	Commercial Stables	Y	Y	C	C	N	N	N	Y	N	N	Y	Y	N	N
R	Airports, Minor	C	N	N	N	N	N	N	C	N	N	C	C	N	N
S	Airports, Major	C	N	N	N	N	N	N	N	N	N	N	C	N	N
T	Bed and Breakfast	Y	Y	Y	Y	C	C	C	Y	N	N	N	N	N	N
U	Marinas	C	N	N	N	N	N	N	N	N	N	N	N	N	C
V	Animal Services	C	C	N	N	N	N	N	C	N	Y	Y	Y	N	N
W	Mini-Warehouse	N	N	N	N	N	N	N	C	N	Y	Y	Y	N	N
X	Off-Site Signs	N	N	N	N	N	N	N	C	N	C	Y	Y	N	N
Y	Special Events	C	C	N	N	N	N	N	C	N	C	C	C	N	Y
	Industrial														
A	Light Industry	N	N	N	N	N	N	N	C	N	N	Y	Y	N	N
B	Moderate Industry	N	N	N	N	N	N	N	C	N	N	C	Y	N	N
C	Heavy Industry	N	N	N	N	N	N	N	N	N	N	N	C	N	N
	Other Uses														
A	Firearm Ranges Indoor	N	N	N	N	N	N	N	N	N	N	N	C	N	N
B	Firearm Ranges Outdoor	C	N	N	N	N	N	N	N	N	N	N	N	N	C
C	Wind Energy System – Single Use Production	Y	Y	Y	Y	C	C	C	C	C	C	C	C	N	C
D	Wind Energy System – Energy Production	C	N	N	N	N	N	N	N	N	N	N	N	N	C
E	Extraction	C	C	N	N	N	N	N	N	N	N	C	C	N	N
F	Disposal	C	N	N	N	N	N	N	N	N	N	N	C	N	N

Division 3. Use in Open Space

In all districts it is possible that areas must be set aside as open space for different types of development options and resource protection areas. Also the Open Space district is designated to provide for similar uses permitted in Table 4.2. Where such open space is required, and where the use is also permitted by the district zoning, then the table 4.2 below shall control.

Table 4.2 Uses in Open Space

	TYPE OF OPEN SPACE								
	Natural Resource protection All Zoning Districts						AG & AT	ER	All Other Districts
General Use	Woodland	Floodway Fringe	Wetland	Drainageway	Native Prairie		Other Open Space		
A. Agricultural									
1. Fields or Pasture	N	Y	N	Y	N		Y	Y	N
2. Livestock (Barn, Shelter or Corral)	N	N	N	N	N		Y	Y	N
3. * Forestry	Y	Y	Y	Y	N		N	N	N
4. Nurseries	N	Y	N	Y	N		Y	N	N
5. Bee Keeping	Y	Y	N	Y	Y		Y	Y	N
B. Recreational									
1. Active Recreation	N	Y	N	Y	N		Y	Y	Y
2. Garden Plots	N	Y	N	Y	N		Y	Y	Y
3. Natural Areas	Y	Y	Y	Y	Y		Y	Y	Y
4. Passive recreation	Y	Y	N	Y	N		Y	Y	Y
5. Picnic Area	Y	Y	N	Y	N		Y	Y	Y
C. Other									
1. * Drainage Structures	Y	Y	Y	Y	N		Y	Y	Y
2. * Filling	N	Y	Y	Y	N		N	Y	Y
3. On-site Disposal System	Y	Y	Y	N	N		Y	Y	O
4. Off-site Disposal System	N	N	N	N	N		Y	Y	N
5. Bufferyard	See Landscaping								

Key to Table 4.2
Y=Permitted by right
N=Not Permitted
O = When public sewer is unavailable, on-site disposal systems may be placed in the open space and used until public sewer becomes available.
* Additional Regulations

Division 4. Use Categories and Standards

The categories of use defined by this Ordinance are set forth in this Division. The uses not enumerated in this Division are not necessarily excluded, as the Zoning Administrator has the ability to make interpretations of use.

The NAICS (North American Industrial Classifications System) are numerical classifications of a use as defined by the US Census Bureau. These numerical codes determine where uses shall be categorized where applicable. These numbers will follow each use description. In some cases, uses fit under multiple sections or subsections, in these cases the Zoning Administrator shall determine where the use shall be categorized.

Section 1. Agricultural Uses

(A) Farms. Farms are agricultural uses involving crop production and animal production that contain at least seventy (70) acres and may include a farm residence, buildings, structures and machinery which are primarily adapted for use for agricultural purposes. In animal production fifty (50) percent or more of the feed for such animals is grown on site and where all wastes are disposed of on site in an approved manner. Forestry and Nursery operations are not considered farms. Parcels which are less than seventy (70) acres may qualify to be designated as a farm if the agricultural activity is carried on as part of the primary productive activity and is separately organized as an independent productive activity. These will be determined on a case by case basis set forth in the Agricultural exemption section; Article 4, Division 9.

(B) Intensive Agriculture. Uses on farms which include feed lots, hog and cattle farms and poultry operations where animals are tightly confined in buildings or outdoor pens, where less than fifty (50) percent of the feed is grown on site, and wastes cannot be disposed of in an approved manner on site. (NAICS 112)

(C) Forestry. This use includes clearing or destruction of forested or woodland areas (as defined by this Ordinance, including mature woodlands and young woodlands), over a contiguous area of one acre or more. Removal of sick or dead trees shall not be considered forestry. Clearing in accordance with an approved subdivision or land development plan must be done in accordance with the standards for preservation of woodlands. (NAICS 113)

(D) Indoor Nurseries. Establishments primarily engaged in the wholesale production of ornamental plants and other nursery products, such as bulbs, florists greens, flowers, shrubbery, trees, flower and vegetable seeds, plants and sod. These products may be grown under cover (greenhouse, frame, cloth house, lath house) These uses do not include the sale or rent, either retail or wholesale, of hardware or tools related to gardening, landscaping or farm implements and other equipment such as lawn mowers, aerators or lawn sweepers. Additionally, no sale or storage of ground cover materials, such as mulch, bark, gravel or decorative stone or landscape related items are permitted on site. (NAICS 1114)

(E) Outdoor Nurseries. Establishments primarily engaged in the wholesale production of ornamental plants and other nursery products, such as bulbs, florists greens, flowers, shrubbery, trees, flower and vegetable seeds, plants, sod and also including Christmas tree farms and tree farms. All nursery products must be grown outdoors. These uses do not include the sale or rent, either retail or wholesale, of hardware or tools related to gardening, landscaping or farm implements and other equipment such as lawn mowers, aerators or lawn sweepers. Additionally, no sale or storage of ground cover materials, such as mulch, bark, gravel or decorative stone or landscape related items are permitted on site. (NAICS 1114)

(1) The following are minimum standards for Outdoor Nursery Uses.

(a) Minimum three (3) acre site.

(b) Requires a site plan which includes an irrigation plan, layouts of all buildings (including residence), storage areas and access point(s).

(c) Provide information regarding the percentage of plants grown on the site versus the percentage of plants brought in from off-site is also required.

(2) The following are additional standards for Christmas Tree Farms

(a) Site plan must show buildings for retail sales of the products grown on site. Building may only be used for retail sales during the Christmas season.

(b) A replanting schedule shall be included as part of the site plan.

(3) The following are additional standards for Tree Farms

(a) Planting, growing and raising of most varieties of shrubs and trees which are planted directly in the ground outdoors and which are exposed to the weather and not protected by any enclosures or coverings. Wholesale and contract sales for off-site delivery only.

(b) Accessory material directly related to the maintenance and care of plant life would be allowed. One four (4) square foot on-premise free-standing non-illuminated sign may be allowed on site.

Section 2. Residential Uses

(A) Single Family. Single family residential uses include all single family detached dwelling units for the purpose of providing living space for one family.

(1) The minimum dimension of the main body of the dwelling unit shall not be less than twenty-two (22) feet.

(2) In no case shall an addition or alteration including two (2) or more buildings constructed as individual dwellings be allowed to be attached.

(3) A manufactured structure can be a single family dwelling if it meets all of the above conditions and the following conditions:

(a) It is manufactured or constructed to be used as a place for human habitation.

(b) It has received a HUD certification in accordance with 42 U.S.C. Section 5415.

(c) It is not constructed or equipped with a permanent hitch or other device allowing transport of the unit other than for the purpose of delivery to a permanent site and it does not have wheels or axles permanently attached to its frame or body.

(d) It does not have a vehicular certificate of registration.

(e) It is taxed as real property by the assessor.

(4) In no such case shall an addition or alteration to a Single Family dwelling provide two separate living quarters that include bedroom(s), kitchen and bath(s) separate from another bedroom(s), kitchen and bath(s). Additions for living space shall not be separated by a garage.

(5) A travel trailer, camper or recreational vehicle shall not be permitted as a single family dwelling.

(B) Cluster. Single-family residential uses that include, as part of the subdivision design, minimum open space meeting the Density Standards as outlined in Article 5 of this Ordinance. Cluster developments allow for density compatible to the district standard with smaller buildable lots with common open space used for public open space or held in common by owners association or land trust or by a private owner if used for agricultural purposes. This development option allows for the protection of natural resources and lessens the impact on the development of agricultural land.

(C) Planned. A large scale development served by public utilities that may consist of a mix of housing types including single-family houses, conservation houses, brownstone townhouses, bi-attached houses, townhouses, detached townhouses, condominiums and apartments. Such developments shall be planned for the entire property and shall meet density and open space provisions of Article 5. Within areas of a planned development, setbacks shall be part of each housing type as outlined in the bulk regulations. This development option allows for the protection of natural resources and lessens the impact on the development of agricultural land.

(D) Mobile Home. A factory built structure designed to be used as a year round residential dwelling without motive power so manufactured or constructed as to permit it being conveyed upon the public streets and highways to be located in a mobile home park. A travel trailer, camper or recreational vehicle shall not be permitted as a mobile home or as a dwelling within a mobile home park. Additionally mobile homes shall not be used as travel trailer, camper or recreational vehicle.

(E) Commercial Apartment. A commercial apartment is a dwelling unit located within a commercial building. The maximum unit sizes are seven hundred (700) square feet for one (1) bedroom units, eight hundred (800) square feet for two (2) bedroom units, and eleven hundred (1,100) square feet for three (3) bedroom units. These units will not be permitted unless all of the conditions listed below are fulfilled:

(1) An outdoor patio, balcony or rooftop patio of not less than sixty (60) square feet is provided for each unit.

(2) In addition to landscaping that is otherwise required; one (1) canopy tree with no less than a 2.5 inch caliper is planted for each unit. These additional trees must be planted as close to the units as possible.

(3) The floor area shall not exceed 50% of the total floor area of the building in which the commercial apartments are located.

Section 3. Institutional Uses

(A) Outdoor Institutional. Outdoor recreational uses include public areas for active recreational activities including, but not limited to, jogging, cycling, tot lots, playing fields, playgrounds, outdoor swimming pools, tennis courts, and golf courses. Also included are passive recreational uses including but not limited to, arboretums, areas for hiking, nature areas, and wildlife sanctuaries. Also included are public picnic areas, garden plots and beaches. Privately owned golf courses and youth recreation camps, are also considered institutional uses. (NAICS 712 and 713910)

(B) Indoor Institutional. These uses include public facilities such as aquariums, conference, community or recreational centers, gymnasiums, libraries or museums. Also churches, child day care centers (day or nursery schools), public or private schools, indoor skating rinks (ice or roller), indoor swimming pools, tennis, racquetball, handball courts, and all other public indoor institutional uses. (NAICS 7121, 6244, and 813110) Childcare homes are permitted home occupations.

(1) Child Care Centers, Nursery Schools and Pre-schools must meet the following additional standards.

(a) A completely fenced play lot shall be provided.

(b) The fenced outdoor play space shall not include driveways, parking areas or land unsuited by other usage or natural features for children's active play space.

(c) There shall be an off-street loading and unloading area for children. Maneuvering room must be provided on the property for parking and loading so as to preclude the necessity of backing out onto a public street.

(d) A minimum of three (3) linear feet of lot frontage must be provided per child. In addition, the lot size or required frontage may not be less than that required by the zoning district in which the facility is located.

(e) Front, rear and side yard setbacks shall be the same as for "other permitted uses in the district".

(f) Additionally, no play equipment may be affixed to the land within any required side yard.

(g) Normal hours of operation shall be limited to 6:00 A.M. to 7:00 P.M.

(h) The applicant shall provide certification or documentation to show that the plans for the proposed facility meet the licensing requirements of the State of Iowa.

(i) Where any outdoor play area is less than twenty (20) feet to a residentially zoned or developed lot, a solid fence or wall at least 6 feet in height or an open fence at least four (4) feet in height with evergreen plantings of six (6) feet in height shall be installed to screen and buffer the outdoor play area from the adjacent property. Landscape materials shall be of such initial size and spacing to reach the required height and opaqueness within two (2)

growing seasons after installation.

(j) The applicant shall provide a floor plan of the facility drawn to scale, and showing the use and dimension of each room and the locations of entrances and exits.

(C) Institutional Residential. These uses include convents or monasteries, group care facilities, nursing homes, protective living facilities, and sheltered care facilities, where the residents live in an institutional environment. The residents would be members of an institution, or would have institutional care, or be treated by staff in an institutional setting rather than living independently. Institutional housing where there is commercial rental is also included in this category. The units shall be larger than a single-family structure. (NAICS 623 Nursing and Residential Care Facilities)

(D) Group Homes. This use includes group care homes, group homes, and sheltered care homes where the residents and any staff live together in a family-type environment. The residents shall be encouraged to participate and live as a family unit. Such units shall be treated as single-family units, and the unit would be an existing single family unit or a new unit constructed so as to appear to be a single-family building rather than an institutional facility.

(E) Public Service. These public uses include emergency service, buildings or garages (e.g., ambulance, fire, police, rescue), utility substations or transmission and distribution facilities, sewage treatment facilities, water storage facilities and waste stabilization and leachate lagoons; and all government-owned facilities, except landfills, mining facilities and prisons. (NAICS 92 Public Administration and 221 Utilities). Because of their public necessity, public service uses are permitted in all zoning districts.

(1) No part of any public or private sewage treatment plants and waste stabilization of leachate lagoons, any public service use with outdoor storage and any building or structure related to that use shall be closer than two hundred (200) feet from any property line or road right-of-way.

(2) Public Services – Not Located in a Building. Water Towers, Public utility substations including electric substations, telephone exchanges, repeater stations, pressure regulator stations and similar structures that are not located in a building shall be located behind the zoning district front yard setback for the subject property and shall be no closer than 50 feet to the side and rear lot lines (except for drive access, storm water detention facilities or landscaping) if they meet the following requirements:

(a) No odor, noise, glare, vibration, dust or electrical interference shall be excessive at the lot lines. If deemed necessary, the Zoning Administrator may require certification from either a civil, mechanical, structural or electrical engineer licensed in the State of Iowa, that none of the above annoyances will be or are present at the lot line of the property containing the public service use; and

(b) A fenced area enclosing such use shall be initially constructed to be no closer than 100 feet from any existing and adjoining residential dwelling.

(3) Public Services – Located in a Building. Public or private utility services which do not meet the requirements of subparagraphs 1 or 2 above will be allowed to follow the bulk standards for the district in which they are located if they meet the following requirements:

(a) All uses must be in an enclosed building.

(b) The building shall be architecturally compatible with the surrounding character of the neighborhood.

(c) The use of the building shall in no way create a nuisance that might infringe on neighbor's ability to enjoy the use of their property.

(d) No odor, noise, glare, vibration, dust, or electrical interference shall be excessive at the lot lines. If deemed necessary, the Zoning Administrator may require certification from a civil, mechanical, structural or electrical engineer licensed in the State of Iowa, that none of the above annoyances will be or are present at the lot line of the property containing the public service use.

(4) Notwithstanding any of the foregoing limitations, public service uses including pressure regulator stations, which do not occupy an area of more than 100 square feet, are exempt from setback requirements and may be located in any district. Public utility water pumping and sanitary sewer lift stations are exempt from the setback requirements and may be located in any district. A six (6) foot fenced area enclosing water pumping or sanitary sewer lift stations shall be initially constructed to be no closer than 100 feet from any existing and adjoining residential dwelling. Those structures located in a residential district shall be screened with a minimum of a six (6) foot tall board on board wood fence. Said fences shall have to meet clear sight distances as determined by the County Engineer.

(F) Cemeteries. These uses include publicly and privately owned cemeteries which may include mausoleums. Cemeteries for pets are also included in this section. Funeral homes or parlors and crematories are not included in this category. Public and private cemetery, including a mausoleum, provided that the mausoleum shall be distant at least 200 feet from any adjacent property and street and highway lines. Conditional Use Permits are required for expansions and new cemeteries. (NAICS 81220)

(1) For a cemetery created or expanded after the adoption of this amendment:

(a) Burial plots shall be located a minimum of 100 feet from any existing well used as a potable water supply.

(b) Burial plots and headstones shall be located a minimum of fifteen (15) feet back from all lot lines or cemetery boundary lines.

(c) Except for a church, funeral home or crematory, where permitted, a cemetery shall be separately organized as the single principle use of the lot. Any lot used as a cemetery shall have a minimum of 100 feet of frontage on at least one public road.

(d) Minimum lot size for a cemetery is 3 acres.

(2) In addition to meeting the requirements of this section, a pet cemetery shall have the following additional requirements listed below. It is the intent of this ordinance to allow for the reuse of land that was used for a pet cemetery.

(a) A pet cemetery shall not be a perpetual care facility. A deed shall not be issued for an animal burial plot. The granting of a conditional use permit does not create a right of access to the pet cemetery for anyone other than the property owner.

(b) A container used to bury an animal shall be biodegradable.

(c) The maximum length of a conditional use permit for a pet cemetery or a pet cemetery permitted by right shall be 20 years. An application to renew a conditional use permit for a pet cemetery may be made within three (3) years of the termination date.

Section 4. Commercial Uses

(A) Agri-tourism.

Uses associated directly to growing operations include the growing of fruits, vegetables, flowers and combinations thereof and raising of livestock on a site or adjacent property. Activities planned or provided on an agricultural property that are accessory and/or share reasonable linkages with agricultural crop and livestock production and/or related agricultural processes occurring on the agricultural property that are intended for the general public education and participation. Examples include but not limited to a winery associated with the growing of grapes on site, a corn maze, pumpkin patch with games and hayrack rides, or petting zoo. Although agricultural related these uses are not considered agricultural uses because they are designed to bring groups or individuals to the site for commercial purposes and shall meet the following:

(1) Obtain a Conditional Use Permit;

(2) Submit a site plan that meets the requirements of this Ordinance.

(B) Convenience Commercial. Uses include:

- Convenience Food Stores (NAICS 44512)
- Personal Services (NAICS 812)
  Examples include Laundries and Dry Cleaners, Beauty Shops, Barber Shops, and Nail Salons

(C) Office. Office uses include:

- Banking and other credit agencies (offices only) (NAICS 521, 522)
- Security, commodity brokers and services (NAICS 523)
- Insurance carriers (NAICS 524)
- Real estate (NAICS 531)
- Holding and other investments (NAICS 525)
- Business services without outdoor storage (NAICS 541, 532)
- Health services (NAICS 621)
- Social services (NAICS 624.)
- Membership organizations (NAICS 813)
- Engineering and management services (NAICS 541)
- Corporate Offices (NAICS 551)

(D) Commercial Retail. Uses include:

- Building supplies (NAICS 4441 except lumberyards and masonry dealers, or any other building supplies use that requires outdoor storage - see Light Industrial)
- General merchandise stores (NAICS 452)
- Super Markets and other Grocery Stores (NAICS 4451)
- Apparel and accessory stores (NAICS 448)
- Furniture and home furnishings stores (NAICS 442)
- Miscellaneous retail (NAICS 454 except fuel dealers)

(E) Heavy Retail and Heavy Services.

These are retail and/or service activities that have large amounts of exterior service or storage areas or partially enclosed structures as listed below. All activities involving the production, processing, cleaning, servicing, testing, or repair of materials goods or products that would be considered as industrial or heavy industrial shall be prohibited in this use. For example, while auto or engine repair is permitted, the storage and disassembly of vehicles and the re-assembly of various parts are considered manufacturing (heavy industry) and junkyards as well, are considered a disposal use. Display areas shall be paved. Display of retail products is not considered outdoor storage. See additional standards listed below: Uses include the following:

- Greenhouses (retail) and greenhouses with garden supplies (NAICS 4442)
- Drive-In Facilities These uses include all establishments providing service to customers in vehicles. These uses include drive-in restaurants, drive-up restaurants, drive-up banking facilities and other uses with drive-up windows. (NAICS 512132, 7221)
- Vehicle dealers, auto repair, and gasoline stations (NAICS 4411, 4412, 8111) see (2)
- Taverns, Bars and Nightclubs (NAICS 72241) see (3)

(1) Outdoor Storage Areas for all Heavy Retail Heavy Service uses shall meet the following requirements:

(a) Material storage yards shall not cover more than 15% of the lot and must have a minimum peripheral setback of fifteen feet.

(b) All outside storage must be completely enclosed in a fenced yard with a minimum screening (landscaping or board on board fence) opacity of 1.0. Chain link fence with slats is not permitted.

(c) No item in the storage yard may be stacked higher than the fence.

(d) Outdoor storage, or the storage of junk, explosives, or flammable materials, and other noxious or dangerous materials are specifically prohibited.

(2) These details are additional standards for vehicle dealers, auto repair, and gasoline stations:

(a) Any outside display of vehicles for sale shall be a minimum ten (10) feet behind the property and in no case shall be located in the public right-of-way. Existing paved sites unable to meet this requirement shall place a barrier a minimum of four (4) feet from property line using one or more of the following: wheel stops, planter box, bollards, etc. to create a separation from the public right of way.

(b) All repair, painting, parts storage, and bodywork activities shall take place within a building.

(c) The maximum number of vehicles awaiting parts and or services shall not exceed more than three (3) vehicles per service bay and shall not exceed

the maximum 15% outdoor storage area. All storage for vehicles awaiting needed parts shall be enclosed in a screened yard with an opacity of 1.0.

(d) All damaged or inoperable parts shall be stored indoors until removed from the premises.

(3) These details are additional standards for Taverns, Bars and Nightclubs:

The parcel the use is located, shall be located no closer than one hundred fifty (150) feet from the nearest parcel boundary of a school, church, residence or any rural or residential district boundary.

(F) Services.

These uses include a wide variety of personal and commercial services. This category does not include those services serving customers in vehicles, such as a drive-up banking facility. Uses include:

- Commercial services (NAICS 522, 523)
- Medical Clinics and Other Medical Services (NAICS 622)
- Personal services (NAICS 8129)
- Miscellaneous repair services (NAICS 8112 ,8113 ,8114)
- Motion picture services (NAICS 5121)

(G) Restaurants.

These uses include all establishments primarily oriented to the serving of food and/or beverages except taverns and nightclubs. This category also does not include those restaurants serving to customers in vehicles. NAICS 722

(H) Commercial Lodging. Hotels, motels, convention centers, and rooming and boarding houses. (NAICS 721110, 7213, 721199)

(I) Agricultural Support. This category includes:

- Agricultural services (NAICS 1151)
- Farm implement dealers (sales and service of farm and agricultural implements)
- Anhydrous Ammonia Storage (NAICS 424910)
- Fertilizer (mixing and storage) (NIACS 325314)
- Feed and Seed (NAICS 424910)

Outdoor Storage Areas for Agricultural Support uses shall meet the following:

(1) Material storage and display yards shall not cover more than 15% of the lot and must have a minimum peripheral setback of fifteen feet.

(2) All outside storage must be completely enclosed in a fenced yard with a minimum screening opacity of 1.0. No item in the storage yard may be stacked higher than the fence.

(3) Outdoor storage, or the storage of junk, explosives, or flammable materials, and other noxious or dangerous materials are specifically prohibited.

(4) Commercial farm chemical storage or anhydrous ammonia storage and filling facilities shall be located one thousand (1000) feet from any dwelling, school, hospital or place of public assembly.

(J) Home Occupations. All home occupations must complete a Home Occupation Application provided by the County, pay the appropriate fee, obtain approval of Home Occupation Permit from the Zoning Administrator and meet all of the following criteria:

(1) The business shall be conducted by a resident of the dwelling. No employees are allowed for a home occupation, other than immediate family members who reside in the dwelling.

(2) The use of the dwelling for a home occupation shall in no way destroy or be incompatible with the residential character of the neighborhood.

(3) No more than one (1) home occupation shall be carried on a parcel of land.

(4) No odor, noise, vibration, dust and electrical interference shall be detectable at the property line.

(5) The residence shall not be used as a storage facility for a business conducted elsewhere.

(6) Automobile dealers and other retail uses that require outdoor display are not permitted as a home occupation.

(7) The following additional standards are required for all home occupations except for child care homes:

(a) The home occupation may be conducted inside the dwelling or accessory building.

(b) No more than twenty (20) percent of the total floor area of the dwelling shall be used for the home occupation. The total floor area shall include total square footage of the house excluding any attached garage or accessory building.

(c) No activity, materials, goods or equipment incidental to the home occupation shall be stored outdoors.

(d) The home occupation shall not significantly increase the traffic in the area.

(e) The home occupation shall be limited to two (2) customers at one time. Parking shall be so designed and constructed to be visible similar to residential property and driveways in the area.

(K) Campgrounds and Recreational Vehicle Camping parks (NAICS 721211)

(1) A three (3) inch caliper tree shall be planted for each campsite not located on a wooded area.

(2) The perimeter of the site shall be developed with a bufferyard as required in Landscaping and Bufferyard requirements section of this Ordinance.

(3) Minimum Requirements for Park

(a) Maximum Density. Ten (10) unit spaces per net buildable acre of park site.

(b) A common service building providing laundry facilities, short order food service, accessory supplies, etc., may be included provided such building shall be located near the center of the park.

(4) Requirements for "campground or RV" spaces.

(a) Minimum Space Area. Three thousand two hundred (3,200) square feet.

(b) An off-drive parking area for each campsite.

(c) The minimum distance between any two (2) recreational vehicles shall be not less than twenty (20) feet.

(L) Communication Towers.

Radio or TV broadcasting towers, telecommunications towers, antenna arrays (except residential satellite dishes). All towers shall be located so that they do not interfere with radio and television reception in residential areas. All towers shall meet the Ankeny Regional Airport Tall Structures Zoning Ordinance.

The following regulations apply to all commercial communication towers except for ham and citizen band radios.

(1) Height. The maximum height for a commercial communication tower in the HI District and LI District is 350'. The maximum height in the GC and AT Districts is 180'. There is no maximum height for commercial communications towers in the AG District.

(2) Setbacks. A commercial communication tower and any accompanying structure must meet the standard nonresidential setbacks for the underlying district. In addition to the setback requirements, there must be sufficient radius of clear land around the tower so that its collapse will be contained on this property. Unless the collapse radius is otherwise specified and certified by an engineer licensed in Iowa, the tower shall be set back from the property line a distance equal to the height of the tower and antenna. Also, there must be enough area for a vehicle doing maintenance to maneuver on the property.

(3) Lighting. Towers located within one (1) mile of a residential zoning district shall use dual lighting system strobe during the day and red incandescent lighting, at night or only red incandescent lighting, subject to FAA requirements.

(4) Landscaping.

(a) The adverse visual impact of a tower shall be minimized through design, location and landscape screening around the tower base and any associated structures. Innovative camouflaging techniques may also be used to minimize the visual impact of a tower. The landscape screening requirement may be waived by the Zoning Administrator under the following situations:

1) The tower is located in the midst of a wooded area and the existing vegetation will provide sufficient screening for the duration of the use.

2) The tower is located in a rural district and in a farm field at least 660' away from an existing or known proposed use or public space where the landscape screening will not be visible from the public roadway.

(b) All landscaping must consist of evergreens or hedge shrubs located outside of any fenced area but within the leased area. Landscaping materials shall be adequately spaced to provide screening. Minimum plantings shall be six (6) foot minimum height for evergreen or four (4) foot minimum height for hedge shrubs at time of planting.

(5) Signs. No signs bearing advertising will be permitted on the fence surrounding the tower. Warning, danger, high voltage or similar signs are allowed.

(6) Co-location. An applicant shall provide a certification by a registered engineer licensed in the State of Iowa that the proposed commercial communication tower is designed, structurally and electrically, to permit at a minimum three (3) antenna systems of comparable size to be added to the original tower. A new commercial communication tower shall not be approved unless the communication equipment for the proposed tower cannot be accommodated on an existing or approved tower within a one mile search radius of the proposed tower due to one or more or the following reasons as documented by a licensed engineer in the State of Iowa:

(a) The planned equipment would exceed the structural capacity of the existing or approved tower.

(b) The planned equipment would cause interference materially impacting the usability of other existing or planned equipment at the tower.

(c) Existing or approved towers cannot accommodate the planned equipment at a height necessary to function reasonably.

(d) Other unforeseen reasons that make it infeasible to locate the planned communications equipment upon an existing or approved tower.

(7) Abandoned or Unused Towers. The applicant shall present a signed lease agreement, a recorded declaration of covenants or other satisfactory evidence showing that the owner/operator of a tower is obligated to promptly remove the tower at the end of the lease term or when the antenna thereon is no longer used, and that the site will be returned to original condition. If a tower is granted a conditional use permit, the conditional use permit will terminate when the lease

for the site terminates or when the antenna is no longer in use.

(8) Safety. The tower design and construction must be certified by a registered engineer. The tower must meet all applicable FCC and FAA requirements.

(9) Equipment Cabinets and buildings. No spacing requirements between equipment cabinets. Equipment buildings must be separated a minimum of 10 feet.

(M) Adult Uses.

These uses include adult bookstores, adult mini motion picture theaters, adult motion picture theaters, massage establishments, and sexual activity establishments. The Adult Use standards are designed to protect and preserve residential and other selected uses from the adverse effects caused by an Adult Use. This is accomplished by placing restrictions on the location of Adult Uses in or adjacent to residential areas, churches, daycares, parks, schools and dwellings

(1) Adult Uses shall not be located within the specified distance from the boundary of any previously established use or district as listed in Table 4.3:

Table 4.3 Adult Use Separation Requirements

Use or Boundary	Distance
Residential District Boundary	1000'
Public or Parochial School	1000'
Church	500'
Licensed Day Care Facility	500'
Public Park Boundary	500'
Dwelling (any residentially used lot)	250'

Such measurement shall be a direct line from the structure containing the Adult Use to the property line or boundary of the uses or districts described above.

(2) Restrictions: All building openings, entries, windows, etc., shall be covered or screened in such a manner as to prevent a view into the interior from any public or semi-public area; and for new construction, and whenever else it is considered feasible by the Zoning Administrator, the building shall be oriented so as to minimize any possibility of viewing the interior from public or semi-public areas.

(3) Advertisements, displays, or other promotional materials shall not be shown or exhibited so as to be visible to the public from pedestrian sidewalks, walkways, streets adjacent to the property, or from other public or semi-public areas. Any such advertisements, displays or other promotional materials shall be considered as signs. This subsection shall not prohibit the placement of a wall sign on a vertical building surface provided it otherwise complies with Sign Regulations of this Ordinance and contains only the name of the adult use business without designs, symbols or other graphics.

(N) Outdoor Commercial Amusement.

These uses include all outdoor commercial amusement facilities including but not limited to outdoor stadiums, racing facilities, rodeos, music arenas, theme parks, amusements parks, go-cart establishments, miniature golf establishments, water slides, giant slides, wave ponds, batting cages, and paintball facilities. All Outdoor Commercial Amusement uses require a Conditional Use Permit.

(1) The following specific requirements are for racing facilities including racetracks and drag strips and competition go-cart facilities. Commercial recreation go-cart facilities do not have to meet these specific requirements:

Minimum Development Requirements

(a) Minimum lot area -- twenty (20) acres

(b) Minimum lot width -- six hundred (600) feet

(c) Minimum front yard setback -- two hundred (200) feet

(d) Minimum side yard -- two hundred (200) feet

(e) Minimum rear yard -- two hundred (200) feet

(f) Bufferyard standards in accordance with Landscaping Standards.

(g) Distance from existing dwelling -- no track shall be located closer than six hundred (600) feet from any existing dwellings other than dwellings located on the property for the proposed track.

(h) Surfacing -- the track shall be surfaced with asphalt or treated to reduce dust.

(2) The following requirements are for any Outdoor Commercial Amusement Use:

(a) Outdoor Structures.

Outdoor structures (bleachers, movie screens, permanent rides), and outdoor seating areas shall be at least one hundred (100) feet from any lot line, exclusive of bufferyards.

(O) Indoor Commercial Amusement.

These uses include all indoor commercial amusement facilities including but not limited to skate parks, bowling alleys, indoor movie theaters, indoor sports arenas, video arcades, and banquet facilities. All uses and/or activities involving discharge of weapons as defined under firearms operations shall be prohibited in this use.

(P) Gasoline Stations.

These uses are primarily engaged in selling gasoline and lubricating oils. These establishments frequently sell other merchandise, such as tires, batteries, and other new automobile merchandise. (NAICS 447190)

All major repair services shall be performed within a completely enclosed building.

(1) No more than three (3) vehicle parking spaces per service bay plus one space per employee shall be permitted. All overnight storage of vehicles

awaiting needed parts shall be within the building or in an enclosed or screened in yard with an opacity of 1.00.

(2) When located within seventy-five (75) feet of a residential use, a gas station shall store all refuse and vehicle parts within a completely enclosed building or within an area which is screened from the view of those residences with a buffer with an opacity of 1.00.

(3) Any pumps, underground fuel storage tanks, and islands, including any canopies, shall be at least twenty-five (25) feet from any street or lot line. Entrances and exits to streets shall be at least one hundred (100) feet from any intersection.

(Q) Commercial Stables.

This use includes for a fee, the boarding, training and recreational riding of horses.

(1) All buildings housing or used by horses and manure storage containment area must be located at least two hundred (200) feet from all boundary lines of the property on which located. Fenced enclosures must be one hundred (100) feet from adjoining residences.

(2) Stable shall be permitted one (1) double faced sign, maximum height ten (10) feet on the premises not to exceed twelve (12) square feet per face.

(3) Manure storage containment must be designed and constructed to screen from adjacent properties and roadway and shall be located in an area of the property that protects drainage ways, creeks, rivers, and/or other natural areas to prevent pollution.

(4) Manure disposal must be shown on in a plan and completed in an appropriate manner approved by the Zoning Administrator.

(5) The maximum number of horses allowed is subject to the animal regulations in Article 4 Division 7. An increase in the number may be granted by Conditional Use Permit request by the Board of Adjustment.

(R) Airports, Minor.

This use includes all airports not classified by the FAA as hub airports or reliever airports. Minor airports include landing strips and heliports (NAICS 481), including those for the private use of an individual.

(1) Landing strips, ultra light landing strips, and heliports (including accessory hangars and sheds) are classified in the commercial general use category and are subject to all Landscaping provisions, except that the Board of Adjustment may require additional buffering in the form of berms. These uses do not include restriction zones such as the runway protection zone, horizontal zone, transitional zone, conical zones, and approach zones, all of which provide added buffering. These restriction zones are permitted to extend into any district.

(2) The area proposed for this use shall be sufficient in size and the site otherwise adequate to meet the standards of the Federal Aviation Administration, Department of Transportation, for the class of airport proposed,

in accordance with their published Rules and Regulations.

(3) Any proposed runway or landing strip shall be situated so that any structures, high voltage power lines, towers, chimneys, and natural obstructions within the approach zones, shall comply with regulations for height restrictions in airport approach zones of the Federal Aviation Administration, Division of Aeronautics, or other airport authority qualified by law to establish hazard zoning regulations.

(4) There shall be sufficient distance between the end of each usable landing strip and the airport boundary to satisfy the requirements of the Federal Aviation Administration. If air rights or easements have been acquired from the owners or abutting properties in which runway protection zones fall proof thereof shall be submitted with the application site plan.

(5) No existing or planned runway protection zones shall be permitted over residential uses.

(6) Off-street parking required: one (1) space for every plane space within the hangars, plus one (1) space for every tie-down space, plus one (1) space for every two (2) employees.

(7) Building setback: any building, hangar, or other structure shall be at least one hundred (100) feet from any street or lot line.

(8) All repair of airplanes and machinery shall be done inside hangars.

(9) Residential uses shall not be located within the runway protection zone or the 75 decibel noise cone as defined by the Iowa Department of Transportation.

(10) The applicant shall comply with the procedures and requirements contained in FAA Order 5050.4A, Airport Environmental Handbook. The public hearing documents required by the Order shall be submitted to the Board of Adjustment in lieu of the Federal Aviation Administration.

(S) Airports, Major.

This use includes all airports classified by the FAA as hub airports or reliever airports and include such accessory uses as landing strips and heliports. (NAICS 481) Airports, including accessory hangars and sheds, are classified in the commercial general use category and are subject to all Landscaping requirements, except that the Board of Adjustment may require additional buffering in the form of berms to reduce noise. These uses do not include restriction zones such as the runway protection zone, horizontal zone, transitional zone, conical zones, and approach zones, all of which provide added buffering. These restriction zones are permitted to extend into any district.

(1) The area proposed for this use shall provide a certification of compliance with the standards of the Federal Aviation Administration, Department of Transportation, for the class of airport proposed.

(2) Any proposed runway or landing strip shall be situated so that structures, high voltage power lines, towers, chimneys, and natural obstructions within the

approach zones comply with regulations for height restrictions in airport approach zones of the Federal Aviation Administration, Division of Aeronautics, or a municipal or other airport authority qualified by law to establish hazard zoning regulations.

(3) There shall be sufficient distance between the end of each usable landing strip and the airport boundary to satisfy the requirements of the Federal Aviation Administration. If air rights or easements have been acquired from the owners or abutting properties in which runway protection zones fall, proof thereof shall be submitted with the site plan prior to construction.

(4) No existing or planned runway protection zones shall be permitted over residential uses.

(5) Off-street parking required: one (1) space for every plan space within the hangars, plus one (1) space for every tie-down space, plus one (1) space for every two (2) employees.

(6) Building setback: any building, hangar, or other structure shall be at least one hundred (100) feet from any street or lot line.

(7) All repair of airplanes and machinery shall be done inside hangars.

(8) Residential uses shall not be located within the runway protection zone or the 75 decibel noise cone as defined by the Iowa Department of Transportation.

(9) The following items shall be submitted, in addition to the items listed in Site Plan requirements, prior to construction:

(a) A copy of the notice of the public hearing.

(b) A copy of the transcript of the hearing, final environmental assessment or statement, and airport layout plan.

(c) Federal Aviation Administration approval including supporting documentation.

(T) Bed and Breakfast Services.

This use applies to lodging for temporary guests in a single-family type structure for a fee in which the owner that operates the establishment resides at the residence used for the Bed and Breakfast Service. The use may advertise and accept reservations, but may not hold itself out to the public to be a restaurant, hotel or motel. The food served at a Bed and Breakfast may only be provided to overnight guests.

(1) Minimal modifications may be done to the residence or grounds only if such changes are compatible with the character of the area and neighborhood.

(2) Parking for all guests shall be off street. Parking may be permitted within the required front yard only if it is screened from the street and neighboring residences.

(3) One four (4) square foot on-premise freestanding sign may be allowed.

(4) When calculating bufferyard requirements this use shall be classified as Other Residential, but shall not be required to screen above Moderate buffering

requirements.

(5) No more than 6 rooms for guest lodging.

(U) Marinas.

Establishments primarily engaged in operating marinas. These establishments rent boat slips and store boats, and generally perform a range of other services including cleaning and boat repair. They frequently sell food, fuel, and fishing supplies, and may sell boats. (NAICS 71393)

(V) Animal Services.

Animal hospital, veterinary clinic, animal shelter, animal training facility, and kennels for the boarding of dogs or other small animals. (NAICS 541940, 115210, 812910)

(1) All animals shall be kept in a manner so as not to be a public or private nuisance. Animals not confined to the property and animals kept in such a manner as to detrimentally affect the public health or welfare shall be considered a nuisance.

(2) Any outside exercising areas or structures which shelter animals, that do not completely conceal animal noises, shall be at least two hundred (200) feet from all residential zoning district boundary or existing dwelling unit(s) or a building that contains an office. No fence for an outside exercise area shall be closer than fifteen (15) feet to a property line. No exercise area shall be located in the front yard of a property.

(3) Fenced livestock enclosures are permitted within designated Open Space for Animal Hospitals, Veterinary Clinics, and Animal Shelters, as long as vegetative ground cover is maintained. Said enclosures are intended to be used only as support for the Animal Service use and not for personal keeping of livestock.

(W) Mini and Self Storage facilities.

This industry comprises establishments primarily engaged in renting or leasing space for self- storage. These establishments provide secure space where clients can store and retrieve their goods. This use must be fully contained within a building in the MU – Mixed Use District and GC- General Commercial District. (NAICS 531130).

Mini and self storage facilities shall meet the following additional standards:

(1) No retail or wholesale business activities shall be conducted on the premises other than those permitted and conducted by the owner or operator of the mini-storage warehouse.

(2) No service, or repair activities are permitted on the premises.

(3) At least one toilet facility shall be available to customers on site.

(4) Outdoor Storage Areas for mini and self storage uses in the (LI) Light Industrial District shall meet the following requirements:

(a) Material storage and display yards shall not cover more than 15% of the lot and be setback a minimum of fifteen (15) feet from adjacent property lines.

(b) All outside storage must be completely enclosed in a fenced yard with a minimum screening opacity of 1.0.

(c) No item in the storage yard may be stacked higher than the fence.

(d) The storage of junk, explosives, or flammable materials, and other noxious or dangerous materials are specifically prohibited.

(e) Shall be paved and curbed.

(X) Off-Site Signs

See Article 11 Signs, Division 4 Detailed Regulations by Sign Type, Section 2 Off-Site Signs (Billboards) for information.

(Y) Special Events

(1) Special events may include carnivals, circuses, outdoor religious meetings, rodeos, outdoor concerts, and special outdoor activities that are different from the primary use of the property. Included are both profit and non-profit groups. Neighborhood block parties shall not be considered within this category.

1) Such events shall be limited to a total of twenty-one (21) days per year with no event exceeding fourteen (14) days in a given twelve (12) month period.

2) The access to the property shall be in accordance with established traffic standards.

3) Water and sanitary sewer (portable toilets may be permitted) must be supplied to the site, light, noise and dust from the activity shall be limited to the site.

4) All parking shall be limited to the site.

5) The event(s) shall meet the Polk County Noise Ordinance requirements and obtain a sound permit if necessary.

6) The event(s) shall provide appropriate measures as determined by the Building Official to protect the attendees of the event(s).

7) The event(s) shall be reviewed by the Polk County Sheriff's Department.

8) Applicant shall provide security if required by Polk County Sheriff's Department.

9) If a Liquor License is needed, the event(s) that shall submit appropriate liquor license application only upon approval of all other items listed above or required by this ordinance. The liquor license shall be submitted in accordance to the Liquor License policy.

Section 5. Industrial Uses

(A) Light Industry.

These uses include, light manufacturing, transportation and wholesale trade uses. All activities must take place within enclosed buildings, except for screened outdoor storage and paved retail display yards as permitted below.

- General Building (NAICS 2361)
- Lumber and other building materials (NAICS 444190)
- Mobile Home Dealers (NAICS 453930)
- Special trade contractors (NAICS 238 except Heavy Construction.238910)
- Furniture and Fixtures (NAICS 337)
- Paperboard containers and products (NAICS 3222)
- Pharmaceutical Preparation (NAICS 3254)
- Instruments and related products (NAICS 3345)
- Miscellaneous Manufacturing Industries (NAICS 3399)
- Local and interurban passenger transit (NAICS 485)
- Trucking and Warehousing without outdoor storage (NAICS 484, 4931)
- Transportation Services (NAICS, 488 except airports)
- Printing and Publishing (NAICS 5111, 5122)
- Septic Tank and Related Services (NAICS 562991)
- Communications (NAICS 515, , 517)
- Wholesale trade, durable goods (NAICS 423 except used parts)
- Wholesale trade, non-durable goods (NAICS 424 except Petroleum & Petroleum Products)
- Fuel dealers (NAICS 45431)
- Lawn and Garden Services and Ornamental Shrub and Tree Services (NACIS 56173)
- Vehicle Storage – indoor (NAICS 493190)
- Commercial Printing (NAICS 323)

Outdoor Storage Areas for all Light Industrial uses in the (LI) Light Industrial District:

(1) Material storage and display yards shall not cover more than 15% of the lot and be setback a minimum of fifteen (15) feet from adjacent property lines.

(2) All outside storage must be completely enclosed in a fenced yard with a minimum screening opacity of 1.0.

(3) No item in the storage yard may be stacked higher than the fence.

(4) The storage of junk, explosives, or flammable materials, and other noxious or dangerous materials are specifically prohibited.

(5) Material and equipment storage area may utilize a gravel surface. Semi and truck trailers are not considered equipment and shall be parked on paved surface.

(B) Moderate Industry.

This use includes manufacturing, transportation and wholesale uses. All activities are within enclosed buildings except for material storage or display yards.

- General Building Contractors – Non-Residential Buildings (NIACS 2362)
- Heavy Construction Contractors (NAICS 237, 532412)
- Excavation Work (NAICS 238910)
- Wrecking and Demolition Work (NAICS 238910)
- Food Products (NAICS 3113, 3114, 3115)
- Textile Mill Products (NAICS 313)
- Apparel and other Finished Products (NAICS 315)
- Lumber and Wood Products, (NAICS 321 except veneer and plywood)
- Rubber and miscellaneous plastics (NAICS 326)
- Leather and Leather Products (NAICS 316999)
- Stone, Clay, Glass and Concrete Products (NAICS 3271)
- Fabricated Metal (NAICS 332.)
- Machinery (NAICS 333.)
- Electronic and Computer Equipment (NAICS 334)
- Transportation Equipment (NAICS 336)
- Manufacturing Industries, not elsewhere classified (NAICS 339)
- Railroad switching and terminals (NAICS 482)
- Trucking and Warehousing with outdoor storage (NAICS 484, 4931)
- Utility, production or processing facilities, but not offices or transmission or distribution (NAICS 221)
- Vehicle storage – outdoor (NAICS 4931)

(1) Outdoor Storage Areas for all Moderate Industrial uses in the (LI) Light Industrial District:

(a) Material storage and display yards shall not cover more than 15% of the lot and be setback a minimum of fifteen (15) feet from adjacent property lines.

(b) All outside storage must be completely enclosed in a fenced yard with a minimum screening opacity of 1.0.

(c) No item in the storage yard may be stacked higher than the fence.

(d) The storage of junk, explosives, or flammable materials, and other noxious or dangerous materials are specifically prohibited.

(C) Heavy Industry.

These uses include heavy manufacturing, and wholesale uses which may be conducted inside and outside buildings. The heavy industrial group contains those uses which have severe potential for negative impact on any uses located relatively close to the plants. This group differs from light and moderate industrial uses in that it includes uses that require structures that may not be enclosed, that are large, tall, and unsightly, such as concrete batching plants. These uses also have enormous potential for generation of odor and excessive noise and may involve large amounts of exterior storage. Because of their scale, they are likely to have a regional impact. All uses listed in this subsection require a Conditional Use Permit.

- Meat Products (NAICS 3116)
- Grain Mill Products, Fats and Oils (NAICS 3112)
- Miscellaneous food and kindred products (NAICS 311 not elsewhere listed)
- Tobacco Products (NAICS 312)
- Logging (NAICS 113310)
- Sawmills and Planing Mills (NAICS 321113, 321912)
- Millwork, veneer, plywood and structural wood products (NAICS 3212)
- Miscellaneous wood products (NAICS 3219)
- Paper Products, (NAICS 322)
- Chemicals and Allied Products (NAICS 325)
- Petroleum and Coal Products (NAICS 324)
- Leather Tanning and finishing (NAICS 316110)
- Concrete, Gypsum and Plaster Products (NAICS 3273 3279)
- Abrasive, Asbestos and Miscellaneous Non-Metallic Mineral Products (NAICS 327 3329)
- Primary Metal Industries (NAICS 331)
- Petroleum and Petroleum Products (NAICS 454.)

(1) The following are specific standards that must be met for Heavy Industrial uses:

(a) All above-ground chemical or fuel tanks (except propane tanks) shall be located in a depressed area sized to hold all the tank volume with a one-foot freeboard. Such depressions shall be lined with materials that prevent the chemicals to be stored from soaking into the ground, and having a positive drainage to an area for pumping up any spill. Tanks in excess of four thousand (4000) gallons shall be enclosed in a chain link, barbed wire topped fence.

(b) Chain link, barbed-wire topped screening and/or fencing (guy wires not included) is required for high-voltage transformers, and any other utility structures or equipment of potential hazard to residents or passersby. Such enclosures shall be screened with hedges.

(c) Explosive manufacture or storage provided that no special permit for the storage of explosives may be issued unless the proposed location of the magazine or magazines for the storage of explosives complies with the current American Table of Distances for Storage of Explosives as revised and approved by the Institute of Makers of Explosives.

Section 6. Other Uses

(A) Firearm Ranges – Indoor

(1) Permitted in a Heavy Industrial District with a Conditional Use Permit approved by the Board of Adjustment. Also, requires the Zoning Commission review and approval of proposal according to State of Iowa Code Chapter 657.9.

(2) All indoor firearm ranges are to be designed by an architect or professional engineer licensed in the State of Iowa using established guidelines for range design. The construction of the range must be certified by the professional designer that the range was constructed according to their design.

(3) In designing an indoor firearm range, the primary concern shall be: Ensuring the health, safety and welfare of the participants, staff, spectators, and adjacent uses.

(4) Any structure housing the firearm operations shall be located at least 150 feet from any street or lot line.

(5) Firearm operations shall not be located within the specified distance from the boundary of any previously established use or district as listed in Table 4.4 below:

Table 4.4 Indoor Firearm Range Separation Requirements

Use or Boundary	Distance
Residential District Zoning Boundary	1,000 feet
Public or Parochial School	1,000 feet
Licensed Day Care Facility	500 feet
Public Park Boundary	500 feet
Dwelling	500 feet

Such measurement shall be a direct line from the structure containing the firearms operations to the property line or boundary of the uses or districts described above.

(6) Walls, ceilings and floors of an indoor firearms operation must be impenetrable. Doors, windows, ventilation ducts, ceiling and walls that may allow the leakage of sound to the outside or an adjacent use shall be sealed and be provided with an air-tight insulation.

(a) Walls, ceilings and floors for new construction shall be poured in-place concrete, pre-cast concrete or dense masonry block. Hollow-core block shall not be used unless completely filled with concrete.

(b) The modification of an existing building not constructed to the standard for a new firearms operation require laminated shields on all vulnerable surfaces beginning three feet behind and extending forward of the firing line to prevent bullet escape. The laminated shield shall be impenetrable and can be constructed of sheet steel or steel plates between two sheets of 3/4" plywood.

(c) Deflectors, as needed and baffles shall be provided to cover and protect vulnerable ceiling areas and range fixtures along the entire width and length of the firing range.

(7) When applying for a conditional use permit the applicant shall provide, in addition to what is otherwise required for a conditional use permit, the following information:

(a) Location of operation

(b) Description of the Firing Range and Operations Procedures including:

1) Detailed description of the operation.

2) Construction methods & type of materials used.

3) Methods of sound control, including but not limited to, the surfaces to be covered by acoustical materials and the location and direction of air intake and exhaust ports.

4) Type of target carrier and whether its location is fixed or variable.

5) Types and calibers of weapons and ammunition proposed to be used.

6) Methods of storage for weapons and ammunition.

7) Safety procedures, rules and regulations proposed.

8) Days and Hours of Operation.

9) Methods of lead abatement and disposal.

10) Proposed landscaping & buffering.

11) Methods used for range cleanup and maintenance.

12) Actual noise levels generated by the firing of firearms.

13) Noise abatement methods and procedures.

(B) Firearm Ranges – Outdoor:

(1) Permitted in an Agricultural District with a Conditional Use Permit approved by the Board of Adjustment. Also, requires the Zoning Commission review and approval of the proposal according to State of Iowa Code Chapter 657.9.

(2) All outdoor firearm ranges are to be designed by an architect or professional engineer licensed in the State of Iowa using established guidelines for range design.

(a) In designing an outdoor firearm range, the primary concern shall be: Ensuring the health, safety and welfare of the participants, staff, spectators, and surrounding inhabitants.

(b) The construction of the range must be certified by the professional designer that the range was constructed according to their design.

(3) When applying for a conditional use permit the applicant shall provide, in addition to what is otherwise required for a conditional use permit, the following information:

(a) Location of the operation

(b) Description of the firing range and operation procedures including:

1) Detailed description of the operation.

2) Types and calibers of weapons and ammunition proposed to be used and means of weapon and ammunition storage.

3) Safety procedures, rules and regulations proposed

4) Days and Hours of operation.

5) Actual noise levels generated by the firing of firearms on the property.

6) Noise abatement methods and procedures.

7) Methods used for range clean up and maintenance including lead abatement and disposal.

(c) Special considerations for the design of the backstop, berms and the bullet impact areas along with proposed landscaping and buffering are of critical importance. Also, a means of restricting unauthorized access onto the range by perimeter fencing, gates, etc, shall be addressed. An Environmental Assessment or an Environmental Impact Statement for the site and an “End Use Plan” which addresses the issue of lead mitigation and abatement for the range shall be submitted for Board of Adjustment review and consideration.

(4) For all outdoor firearm ranges, proper legal documents must be presented that outline:

(a) Post operation cleanup procedures

(b) Legal responsibility for any environmental pollution that could occur after the facility is closed; and

(c) Financial ability to clean up any possible pollution that occurs after the facility is closed.

(5) The owner/operator may be required to submit a bond or surety which would guarantee and cover any or all the cost of cleanup necessary after range abandonment or ceasing of its operation.

(C) Wind Energy System –Single Use/ Shared Production

(1) See Chapter 22 Polk County Code of Ordinances for detailed requirements.

(D) Wind Energy System – Energy Production

(1) See Chapter 22 Polk County Code of Ordinances for detailed requirements.

(E) Extraction Uses.

This category includes all extracting uses including: metal mining, coal mining, oil and gas extraction and mining and quarrying of non-metallic minerals, except fuels. (NAICS 211, 212, 213)

(1) This use may also include concrete and/or asphalt batch plants when a Conditional Use Permit has been granted allowing it as an accessory use to the principal extraction use. The concrete and/or asphalt batch plant operation shall cease when the extraction use is terminated.

Sand, clay, shale, gravel, topsoil, or similar extractive operations, including borrow pits (excavations for removing material for filling operations), shall be considered extraction operations. When applying for a conditional use permit the applicant shall provide the following plans and information:

(2) Plans Required

(a) Plan of general area (within a one (1) mile radius of site) shall be prepared at a scale of one thousand (1,000) feet to the inch or less, with a ten (10) foot contour interval or less, to show:

1) Location of proposed site.

2) Aerial information showing existing roads, buildings, ground cover and other features.

3) Surface drainage patterns.

4) Groundwater movements and aquifer information, including aquifer recharge data.

(b) Plans for the site require:

1) Soil and geology information, with soil borings.

2) Vegetation cover on the site and dominant species.

3) Interior road pattern, its relation to operation yard and points of ingress and egress to State and County roads.

4) Proposed tree and berm screening locations.

5) Soil embankments for noise, dust, and visual barriers, and heights of spoil mounds.

(c) Plan of operation showing:

1) Type of material to be removed.

2) Annual removal rate, including estimated amount and description of materials including overburden to be removed.

3) Method of extraction, including types of equipment, use of conveyors, use of blasting materials.

4) Supplementary processes, drying, grading, mixing or manufacturing.

5) Estimated life of the operation and maximum extent of area disturbed, final depths, and sidewall slopes.

6) Compliance with the recommendations of the soil borings test.

7) Sediment and erosion control plan.

8) Types and weights of all vehicles leaving from and arriving to a site and their routes to State roads.

9) Source of water, if plan shows use of water.

10) Method of disposition of excess water during operation.

11) Location and typical schedule of blasting.

12) On site machinery, type and noise levels.

13) Safety measures and monitoring of complaints.

(d) End Use Plan

An end use plan for the rehabilitation of the site after the extraction operation is completed shall be submitted and must be approved by the Board of Adjustment. Such plan shall show and provide for either a final end use or an open space use. If it is to be an open space use, documentation as to who shall own and maintain such site or restrictive easements must be presented as well as a final contour and site plan submittal. If there is an end use other than open space, then engineering data on the length of time needed for the restoration work to settle sufficiently to provide a stable base for the proposed end use shall be submitted. For all such uses, proper legal documents must be presented that outline:

1) Post operation maintenance procedures; and

2) Legal responsibility for any environmental pollution that could occur after the facility is closed; and

3) Financial ability to clean up any possible pollution that occurs after the facility closed.

(3) Performance Standards

(a) Operations. Extractive operations shall meet all development and performance standards of this Ordinance and all applicable local, state and federal regulations.

(b) Setbacks. No excavation, quarry wall, or storage area shall be located within one hundred twenty-five (125) feet from any street right-of-way. The setbacks listed in Table 4.5 are required from the periphery of the subject property to any excavation, quarry wall, or storage area on the subject property. Setback distance is dependent upon the use of adjacent property. (See Table 4.5)

Table 4.5 Extraction Use Required Setback from Abutting Uses

Use of Abutting Property	Setback from Lot Line
Vacant	200 feet
Open Space	200 feet
Recreational	200 feet
Agricultural	150 feet
Residential	200 feet
Institutional	200 feet
Commercial	150 feet
Industrial	50 feet

(c) Grading. All excavations shall be graded in such a way as to provide an area which is harmonious with the surrounding terrain and not dangerous to human or animal life.

1) Excavations shall be graded and backfilled to the grades indicated by the site plan. Grading and backfilling shall be accomplished continually and as soon as practicable after excavation. Grading and backfilling may be accomplished by use of construction rubble such as concrete, asphalt, or other materials, providing such materials are composed of non-noxious, noncombustible solids.

2) Grading and backfilling shall be accomplished in such a manner that the slope of the fill or its cover shall not exceed the normal angle of slippage of such material, or thirty-three (33) degrees in angle, whichever is less. During grading and backfilling, the setback requirements in paragraph b. above may be reduced by one-half, so that the top of the graded slope shall not be closer than twenty-five (25) feet to any lot line, seventy-five (75) feet to any street line, nor within one hundred (100) feet of any nature reserve or residential district boundary line.

3) When excavations which provide for a body of water are part of the final use of the tract, the banks of the excavation shall be sloped to a minimum ratio of four (4) feet horizontal to one (1) foot vertical, beginning at least (50) feet from the edge of the water and maintained into the water to a depth of five (5) feet. Swimming areas shall have a slope ratio of seven (7) feet horizontal to one (1) foot vertical, beginning at least (50) feet from the edge of the water and maintained into the water to a depth of five (5) feet.

4) Drainage shall be provided, either natural or artificial, so that disturbed areas shall not collect nor permit stagnant water to remain.

(a) Access. Truck and/or rail access to any excavation shall be so arranged as to minimize danger to traffic and nuisance to surrounding properties.

(b) Planting. When planting and open space is part of the end use plan all land not covered by water shall be covered with a sufficient amount of arable soil to support vegetation. A planting plan shall be prepared for the

entire finished tract using various types of plant material that prevent soil erosion and provide vegetation cover. When buildings are proposed as part of the final use to which the tract is put, planting in areas adjacent to proposed buildings shall be planted with a vegetative cover in keeping with the requirements of the ultimate building purposes.

(4) Extraction Accessory Use Standards.

(a) No structures associated with accessory uses shall be located within 200 feet from any street right-of-way or within 1000 feet of any residential dwelling.

(b) All other applicable requirements of this section shall apply when considering an accessory use for conditional use approval.

(c) Concrete batch plants and/or asphalt batch plants and/or concrete recycling plants or asphalt recycling plants may be used as an accessory use to the extraction operation.

(d) Accessory extraction uses, including temporary batch and recycling plants, shall not continue after the extraction use has ceased operation.

(5) Each conditional use permit for an extraction use shall be valid for a specified period of time as approved by the Board of Adjustment. Notwithstanding the permit period approved by the Board of Adjustment; when it has been determined that a mine or quarry has 90% of its permitted surface extraction area removed; extraction and mining operations shall not continue more that five years beyond such determination or the permit expiration date, whichever is less.

(a) Such permit period shall include the time necessary to complete the End Use Plan.

(b) Such permit period shall expire as specified, if not amended by the Board of Adjustment.

(F) Disposal Uses.

This category shall include landfills, trash transfer sites, yard waste compost facilities, incinerators, sludge or other land disposal or storage of septic tank wastes or sludge, trash, junk cars, recycling facilities, used auto parts, or junkyards shall be considered disposal operations and any other form of waste management facilities. (NAICS 562 and 42314) When applying for a conditional use permit the applicant shall provide the following plans and information in addition to what is otherwise required for a conditional use permit:

These uses create major disruptions to the area's environment even when carefully regulated. Dust, dirt, noise, and unsightly conditions can be anticipated. None of these uses is an acceptable neighbor in a residential environment.

(1) Plans Required

(a) Plan of general area (within a one (1) mile radius of site) shall be prepared at a scale of one thousand (1,000) feet to the inch or less, with a ten (10) foot contour interval or less, to show:

1) Location of proposed site.

2) Land Use pattern including all building locations and historical sites.

3) The width, weight loads, types of surfaces and traffic data for major roads.

4) Surface drainage patterns.

5) Groundwater movements and aquifer information, including aquifer recharge data.

6) Climate, precipitation, and wind data with directions and percentage of time.

(b) Site and Geological Data

1) Soil and geology, with soil borings on a 100 foot grid.

2) Vegetation cover on the site and dominant species.

3) Interior road pattern, its relation to operation yard and points of ingress and egress to State and County roads.

4) Proposed tree and berm screen locations.

5) Soil embankments for noise, dust, and visual barriers, and heights of spoil mounds.

(c) Plan of operation showing:

1) Approximate number of cubic yards or thousands of gallons of waste to be accepted per day.

2) Detailed description of the operation.

3) Method of protecting wastes from exposure to wind, rain, or biological influences.

4) Types of liners or other barriers to prevent movement through the soils.

5) Types of leachate generated and method of managing these materials.

6) Type and origination of the waste materials.

7) Average number and weights of vehicles entering the site and the routes taken to State Roads.

8) On-site management techniques use and to protect against odor, dust, litter, animal and insect vectors.

9) Method of disposition of excess water during operation.

10) Machinery, type and noise levels.

11) Safety measures and monitoring of complaints.

12) Source of water if final plan shows use of water.

13) Estimated life of operation and maximum extent of area disturbed, final depths and side wall slopes. Approval of the Use shall be for the time specified under the conditional use permit.

(d) End Use Plan

An end use plan for the rehabilitation of the site after the extraction or disposal operation is completed shall be submitted and must be approved by the Board of Adjustment. Such plan shall show and provide for either a final end use or an open space use. If it is to be an open space use, documentation as to who shall own and maintain such site or restrictive easements must be presented as well as a final contour and site plan submittal. If an end use plan shows use of water, the source of water shall be shown. If there is an end use other than open space, then engineering data on the length of time needed for the restoration work to settle sufficiently to provide a stable base for the proposed end use shall be submitted. For all such uses, proper legal documents must be presented that outline: post operation maintenance procedures; and

1) Legal responsibility for any environmental pollution that could occur after the facility is closed; and

2) Financial ability to clean up any possible pollution that occurs after the facility is closed.

(2) Performance Standards

(a) Operations. Disposal operations shall meet all development and performance standards of this Ordinance and all applicable local, state and federal regulations.

(b) Setbacks. No disposal site, sludge or other land disposal use or junkyard, area shall be located within two hundred (200) feet from any street right-of-way. The setbacks listed in Table 4.6 are required from the periphery of the subject property to any disposal site, sludge or other land disposal use or junkyard area on the subject property. Setback distance is dependent upon the use of adjacent property. (See Table 4.6)

Table 4.6 Disposal Use Required Setback from Abutting Property

Use of Abutting Property	Required Setback from Lot Line
Vacant	200 feet
Open Space	200 feet
Recreational	200 feet
Agricultural	150 feet
Residential	200 feet
Institutional	200 feet
Commercial	150 feet
Industrial	50 feet

(c) Planting. When planting is the final use to which the tract is put, all that is not covered by water shall be covered with a sufficient amount of topsoil to support vegetation. A planting plan shall be prepared for the entire finished tract using various types of plant material that prevent soil erosion and provide vegetation cover. When buildings are proposed as part of the final use to which the tract is put, planting in areas adjacent to proposed buildings shall be planted with a vegetative cover in keeping with the requirements of the ultimate building purposes.

Division 5. Temporary Uses

Section 1. Authorization

Temporary uses are permitted only as expressly provided in this Division.

Section 2. Permit Required

No temporary use shall be established unless a Certificate of Use application showing compliance with the provisions of this Ordinance has been completed and issued by the Zoning Administrator.

Section 3. Use Limitation

No signs in connection with a temporary use shall be permitted unless otherwise permitted.

Section 4. Particular Temporary Uses Permitted

The following are temporary uses which are subject to specific regulations and standards as set forth below, in addition to the other requirements specified in this Ordinance.

(A) Christmas Tree Sales

(1) Permitted in any district.

(2) Maximum length of permit for display and open-lot sales shall be forty-five (45) days per year.

(B) Contractor's Office, Construction Equipment Sheds, and Trailers.

(1) Permitted in any district, where the temporary use is incidental to a construction project with an active building permit.

(2) Maximum length of temporary permit shall be one (1) year.

(3) The temporary structure shall be removed from the property upon issuance of an occupancy permit for the new or rehabilitated building.

(4) Such permits shall be renewable at the discretion of the Zoning Administrator.

(C) Real Estate Sales Office

(1) Permitted on the property of the new development approved in accordance with the Polk County Zoning and Subdivision Ordinances. A model home may be used as a temporary sales office.

(2) Maximum length of permit shall be one (1) year, and may be renewed from year to year until the completion of the development.

(3) The office shall be removed upon completion of the development of the subdivision.

(D) Temporary Shelter

(1) When fire or natural disaster has rendered a single-family residence unfit for human habitation, the temporary use of a camper or recreational vehicle located on the single-family lot during rehabilitation of the original residence or construction of a new residence is permitted subject to the following additional regulations:

(a) Required water and sanitary waste facilities must be provided.

(b) Maximum length of permit shall be six (6) months, but the Zoning Administrator or designee may extend the permit for a period or periods not to exceed sixty (60) days in the event of circumstances beyond the control of the owner. Application for the extension shall be made at least fifteen (15) days prior to expiration of the original permit.

(2) A recreational vehicle (RV's) or camper may be used for temporary shelter in unincorporated Polk County for a period not to exceed twenty one (21) days in a calendar year and not more than fourteen (14) consecutive nights during any one stay. This is to accommodate traveling visitors. The following additional requirements must be met:

1) Health regulations and disposal of waste must be met.

2) Limited to one RV or camper at a time per property.

3) The twenty one (21) days in a calendar year are per property.

(E) Produce or Farm Stands

A stand or display for the sale of produce or other farm products grown on property.

(1) Operating as a temporary use shall not be open for more than six (6) months. . If stand is located off property, written permission shall be provided from the landowner to the County.

(2) All temporary signs shall be affixed to the stand and, when added together, shall not exceed thirty-five (35) square feet in area. The sign(s) may contain the name of the stand but shall only contain advertising that pertains to the produce sold at the stand. This type of sign will require the issuance of a sign permit.

(3) The stand and parking for the stand shall neither block nor be located within any right-of-way and shall be a minimum of ten (10) feet from the paved surface of the road. The stand shall be minimum (100) feet from any intersection and conform to the clear view distance requirements.

(F) Mobile Food Units

(1) Mobile Food Unit: Any type of annually licensed food establishment that is a readily movable vehicle (on wheels), that is self-propelled (driven), or can be pulled or pushed to a location and used for the vending of food or beverage items to the public.

(a) Permit: Every Mobile Food Unit shall apply to Polk County Public Works for a permit to operate at least three business days prior to use by providing the following information upon a form to be provided by the County:

1) The full name, age, permanent address and phone number of the applicant.

2) A description of the food to be sold.

3) The business name and address.

4) The starting date and duration of the proposed sale.

5) The address of the private property where the sale will be held, and the name and address of the property owner or person in control of that property.

6) A written statement from the property owner or person in control of the property listed in subsection 5) of this section that the applicant is authorized to use the property for a sale on the proposed dates.

7) The period of time the applicant has been engaged in the same or similar business, and the jurisdictions in which the applicant has previously conducted business in the last year.

8) A description of the structure, vehicle, tent, trailer or other configuration from which the sale will be conducted.

9) The application must be accompanied by a copy of all required permits and licenses, including but not limited to, a retail sales tax permit issued by the Iowa Department of Revenue. Applicant is required to obtain and establish in its application that it has obtained insurance of the type and amounts specified.

10) A description of how bathroom facilities will be provided to satisfy the requirements of section.

(b) Parking: The premises of operation must have at least three paved off-street parking spaces dedicated to the Mobile Food Unit and is served by a paved driveway from a public right-of-way. For purposes of this subsection, a Mobile Food Unit may share parking with an existing business on the site only if available parking is sufficient to serve the normal operations of both. If the operation of a Mobile Food Unit at the site has caused an overflow of customer or employee parking into the street or other private parking lots in the vicinity within the past year, shared parking is presumed to be insufficient.

(c) Duration: License must be renewed annually with Polk County Planning and Development.

(d) Bathrooms: Access to restrooms are required through written agreement with property owner or adjacent business operator

(e) Hours of operation: Mobile Food Units are permitted to operate between 5:30 a.m. and 1:30 a.m. the following days unless the premises is located within 125 feet of any residentially zoned property. Within 125 feet of a residential property, mobile food units are allowed to operate between 8:00 a.m. and 10:30 p.m. on the same day. Mobile Food Units operating on premises subject to a permit shall remove all equipment, temporary structures, garbage, and any vehicle or trailer used in the operation of the business from the licensed premises and the underlying parcel at any time not open for business and during hours business is prohibited. This section does not apply to temporary closures of the business of up to 30 minutes two times

during allowed hours of operations.

(f) Restrictions – not allowed as standalone use on vacant lot.:

1) Must meet all applicable requirements of this section, the County Code, the Iowa Code, and the Iowa Administrative Code.

2) The premises of operation must be within a MU, NB, GC, LI, or HI zoning district.

3) The premises is not on a parcel having a residential use as its principal use.

4) Trailers, vehicles, tents, equipment, and areas used for the storage, display or sale of food will be located only on a paved surface outside required zoning setback for structures and outside any required fire lanes and drive approaches.

(G) Temporary Concrete Batch Plants or Temporary Asphalt Batch Plants or Temporary Concrete or Temporary Asphalt Recycling Plants associated with road projects.

(1) Permitted in AG, AT, LI and HI Districts subject to the following:

(a) Permitted by Conditional Use Permit for a period not to exceed three (3) years. Extension or renewal of such Conditional Use Permit shall not be authorized.

(b) Permitted only as an ancillary facility to an existing permanent concrete or asphalt batch plant or concrete or asphalt recycling plant located within the County. This grant of privilege is for the same use as the existing facility only.

(c) The Contractor shall submit a routing of trucks delivering raw materials to and from the proposed plant to the Polk County Public Works Department as a condition prior to approval.

(d) The Contractor shall be required to restore the area to its original productive state prior to the end of the three (3) year operation time period.

(e) Such facilities shall only be allowed to access via arterial or collector roads and highways. Access via local residential roads serving residential areas shall be prohibited.

(f) Entire site must be 600 feet from a single residential dwelling or 1,000 feet from a group of 3 or more residential dwellings clustered together at a spacing of 300 feet or less. A residence on the property on which a temporary use is located shall not be counted in this requirement.

(2) Also permitted for longer time periods under the following terms and conditions:

(a) Permitted in all districts where allowed by conditional use permit in connection with the sand and gravel operation.

(b) Such facility shall be erected only in conjunction with city, county, state or federal highway projects in Polk County.

(c) They shall be permitted only for the period of such projects.

(d) The contractor shall submit a routing of trucks delivering raw materials to and from the proposed plants to the Polk County Public Works Department as a condition prior to approval.

(e) The contractor shall be required to restore the area to its original productive state.

(f) Such facilities shall only be allowed to access via arterial or collector roads and highways. Access via local residential roads serving residential areas shall be prohibited.

(g) Entire site must be 1,000 feet from a residential dwelling.

Division 6. Accessory Regulations

These requirements pertain to customary accessory uses, buildings and structures incidental to principle use.

Section 1. Residential Accessory Buildings

All accessory buildings shall meet the following requirements:

(A) Use of building is subordinate to and customarily incidental to a principal residential structure or a principal use.

(B) Located on the same lot as the principal residential structure or principal use.

(C) An accessory building, in-ground pool or above-ground pool must be located at least ten (10) feet from a principal structure. Deck attached to the principal structure and/or surrounding a pool adjacent to the principal structure is considered part of principal structure

(D) A building attached to the principal building by a breezeway or covered walkway less than twenty (20) feet in length shall not be considered accessory.

(E) The building coverage area of all principal and accessory buildings and structures shall not exceed the building coverage limits for the zoning district in which located.

(F) The height of an accessory building shall not exceed the height of the principal building or twenty-four (24) feet whichever is greater.

(G) If the gross floor area of an accessory building is:

(1) Seven hundred twenty (720) square feet or less, it shall be located at least five (5) feet from the side or rear property line;

(2) More than seven hundred twenty (720) square feet, it shall be located at least ten (10) feet from the side or rear property line.

(3) Existing and nonconforming accessory structures may be enlarged or altered as long as dimensional or bulk deficiencies are not increased. Total square footage is not to exceed 1008 square feet.

(H) A use may not be permitted in an accessory building that is not permitted in the zoning district.

(I) One accessory building of one hundred twenty (120) square feet or less may be permitted on a lot prior to the establishment of a principal residential use, provided such building is not used for the keeping of animals, or as a home occupation.

(J) An accessory building may not be placed in front of the principal building unless said accessory building:

(1) Is setback a minimum of 100 feet from front property lines; and

(2) Has a maximum separation distance between the principal structure and accessory building of 150 feet.

(K) An accessory building may be placed in front of the principal building on corner lots or lots with multiple front yards. Said accessory buildings are permitted in front of the principal structure in the yard, which does not contain primary access. The accessory

building shall meet the minimum principal building front yard setback for the underlying zoning district.

(L) No vehicle or trailer or part of any vehicle or trailer may be used as an accessory building.

(M) Shipping containers may be used as accessory buildings when certified by an engineer that they are structurally sound to withstand snow load and wind speed requirements of the Polk County Construction Code. Any advertisements, logos or other markings must be removed.

(N) Accessory structures in all mobile home parks shall meet the specific bulk standards of the MH district.

Section 2. Temporary Structures

(A) Temporary Greenhouses – must meet accessory residential setback requirements. Permits not required for temporary greenhouses. No permanent electrical, plumbing or mechanical improvements are permitted in temporary greenhouses.

(B) Chicken Coops and other small animal shelters under 120 square feet must meet residential accessory building setback requirements and meet animal regulation separation requirements.

Section 3. Solar Panels and Solar Arrays

(A) Solar Panels – building mounted are permitted as an accessory structure in all districts. Permits required to determine structural compatibility.

(B) Solar Arrays permitted as an accessory structure in all districts. Must meet accessory setback requirements. Permits required to determine structural compatibility.

Section 4. Swimming Pools

Swimming Pools, as defined by this ordinance, shall meet applicable Division 6 Section 1, Accessory Building requirements in addition to the following:

(A) A solid wall, non-climbable fence, railing, or chain link fence not less than four (4) feet in height shall enclose all swimming pools.

(B) Fences shall enclose swimming pools and have a self-latching gate to prevent unauthorized entry.

(C) Pools with a power safety cover complying with ASTM F 1346 need not comply with fence requirement.

Section 5. Fences and Retaining Walls

(A) Fences - Provided there is no obstruction of a sight distance all fences shall meet the following requirements:

(1) Residential fences not exceeding four and one half (4 1/2) feet in height are permitted in the front yard setback, and fences not exceeding six and (6) feet in height are permitted in the side or rear yard setback. Structural support for fencing shall be placed facing the property interior. Due to grade changes and slopes no fence shall be taller than six and one half (6 1/2) feet in overall height from ground to top of fence.

(2) Non-residential fences shall not exceed twelve (12) feet in height, except those built for recreational purposes, or those securing correctional and military facilities.

(B) Retaining walls - Provided there is no obstruction of a sight distance, all retaining walls shall meet the following requirements:

(1) Retaining walls greater than four (4) feet in height shall be setback a minimum distance from the base of the retaining wall to any property line equal to 1.5 times the height of the wall as measured from the top of the footing to the highest point of the wall. If the retaining wall collapse or fail, it should fall wholly within the property lines on which it is located.

(2) The property owner is required to provide engineering design for any proposed retaining wall that will be located closer than 1.5 times the height of the wall to the property line.

(3) The property owner shall obtain a building permit to install any retaining wall greater than 4 feet in height. The retaining wall shall be installed according to manufacturer's specifications.

(4) Retaining walls located within three 3 feet of each other shall be considered the same retaining wall. (stair step design)

(5) Guard rails shall be provided on retaining walls that are 30 inches or more above grade when the retaining wall is considered part of a building structure, the retaining wall is in close proximity to a finished walking surface (loading dock, sidewalk, bike path, patio, or similar), or in any location on a commercial or multifamily project where the height and location of the retaining wall create an obvious fall hazard.

Section 6. Non-residential Accessory Uses

(A) Non-residential Accessory uses shall not exceed ten (10%) percent of the floor area, or land area, whichever is the appropriate measure of usage.

(B) Non-residential accessory uses not permitted in a zone as a principal use may be permitted as an accessory use if they are clearly incidental and subordinate to the principal permitted non-residential use, as determined by the Zoning Administrator, but in no case shall any use requiring a Conditional Permit be placed without such permit.

(C) Some uses may have additional requirements listed in the Use Categories and Detailed Standards - Article 4 Division 4.

(D) Accessory uses shall not continue after the principal use has ceased operation.

Division 7. Animal Regulations

Section 1. Keeping of Animals

(A) All animals shall be kept in a manner so as to not be a nuisance to the public. Animals not confined to the owner's property and animals kept in such a manner as to affect the public health or welfare shall be considered a nuisance.

(B) Fenced areas confining livestock shall be located 100 feet or more from neighboring dwelling unit.

(C) Structures enclosing 120 square feet or more of ground floor area and which shelter animals, except dogs and cats, shall be located 150 feet or more from neighboring dwelling unit. All animals shall be provided shelter within a minimum three sided structure.

(D) The following regulations shall apply to the keeping of animals for personal use on all parcels unless otherwise permitted.

(1) No more than three adult dogs (6 months or older) and three adult cats (4 months or older) may be kept by the occupant. There is no limit on the permitted number of juvenile (less than 6 months old) animals permitted on the property provided they are offspring to the adults currently on the property.

(2) On lots smaller than one (1) acre, any combination not to exceed twelve (12)) poultry, adult rabbits or other small domesticated animals is permitted. On parcels of one (1) acre in size to less than three (3) acres in size, any combination not to exceed, twenty four (24) adult rabbits, poultry or other small domesticated animals is permitted. For every additional acre in excess of three (3) acres, an additional twenty four (24) adult animals shall be permitted. There is no limit on the permitted number of juvenile (less than 6 months old) animals permitted on the property provided they are offspring to the adults currently on the property.

(3) No livestock; including pigs, cattle, sheep, goats, horses, or other large domesticated animals shall be kept on parcels smaller than one (1) acres. On parcels of one (1) acres in size one (1) such adult animal is permitted. For every additional acre in excess of one acre, any combination not to exceed one (1) additional adult animal in this class shall be permitted. There is no limit on the permitted number of juvenile (less than 6 months old) animals permitted on the property provided they are offspring to the adults currently on the property.

(4) On parcels zoned AG, AT or ER and ten (10) acres or more in size, there is no limit on the number of livestock kept for private use.

(5) Animals kept for commercial purposes are regulated under specific use regulations.

Division 8. Conditional Uses

Conditional uses are those uses which have some special impact or uniqueness such that their effect on the surrounding environment cannot be determined in advance of the use being proposed for a particular location. When such a use is proposed, a review by the Board of Adjustment of the location, design, configuration, and impact will be conducted, comparing the proposed use to fixed standards.

Section 1. Review Standards

The review determines whether the proposed use should be permitted by weighing public need for and benefits to be derived from the use against the local impact which it may cause. The review shall consider the proposal in terms of:

(A) Existing zoning and land use in the vicinity of the use; and

(B) planned and proposed public and private developments which may be adversely affected by the proposed use; and

(C) whether and to what extent the proposed use, at the particular location for which it is suggested, is necessary or desirable to provide a development which is in the interest of the public or which will contribute to the general welfare of the area or Polk County; and

(D) whether and to what extent all steps possible have been taken by the developer to minimize any adverse effects of the proposed use on the immediate vicinity and on the public health, safety and welfare in general.

Section 2. General Standards

No application for a conditional use permit shall be approved unless the Board of Adjustment specifically finds the proposed conditional use appropriate in the location for which it is proposed. This finding shall be based on the following criteria:

The proposed use shall be in harmony with the general purpose, goals, objectives, and standards of the Polk County Comprehensive Plan, this Ordinance, or any other plan, program, map, or ordinance adopted, or under consideration pursuant to official notice, by the County.

(A) The proposed location and use shall be consistent with policies or provisions of the Comprehensive Plan, this Ordinance, or other plans or programs of the County.

(B) The proposed use at the proposed location shall not result in a substantial or undue adverse effect on adjacent property, the character of the neighborhood, traffic conditions, parking, public improvements, public sites or rights-of-way, or other matters affecting the public health, safety, and general welfare, either as they now exist or as they may in the future be developed as a result of the implementation of provisions and policies of the Comprehensive Plan, this Ordinance, or any other plan, program, map, or ordinance adopted, or under consideration pursuant to official notice, by the County or other governmental agency having jurisdiction to guide growth and development.

(C) The proposed use in the proposed area will be adequately served by, and will not impose an undue burden on, any public improvements, facilities, utilities, and services. Where any such improvements, facilities, utilities, or services are not available or adequate to service the proposed use in the proposed location, the applicant shall, as part of the application and a condition to approval of the proposed conditional use permit, be responsible for establishing ability, willingness, and binding commitment to provide such improvements, facilities, utilities, and services in sufficient time, and in a manner consistent with the Comprehensive Plan, this Ordinance, and other plans, programs, maps, and ordinances adopted by Polk County to service the development. The approval of the conditional use permit shall be conditioned upon such improvements, facilities, utilities, and services being provided and guaranteed by the applicant.

Section 3. Procedures

The following regulations set forth the procedures for a Conditional Use Permit.

(A) Application.

(1) Applications shall be provided by the County.

(2) Any conditional use designated in Table of Uses of this Ordinance shall comply with the requirements for Site Plan of this Ordinance.

(3) In addition, a legally constituted body empowered by the Code of Iowa with the power of eminent domain may also apply for a Conditional Use Permit for land proposed for a public purpose.

(4) A Building Permit application may be applied for only upon approval of request.

(B) Processing by the Board of Adjustment.

Applications for a Conditional Use Permit shall be processed by the Board of Adjustment in the same manner as a site plan in addition to other entities that may be affected by the proposed use as determined by the Zoning Administrator.

(C) Public Hearing.

(1) Notice. Notice of meeting shall also be given to all property owners within five hundred (500) feet of the boundary of the property on which the conditional use is to be located by placing a notice in the United States mail at least fifteen (15) days prior to the meeting. Notice shall contain the time and location of said meeting.

(2) Recommendations. Approximately five (5) days prior to the date set for the meeting on the application, the Planning Administrator and each official or consultant to which the application has been referred shall file a written report thereon with the Board of Adjustment. The reports shall set forth the recommendations for changes in the plans, as submitted, and the conditions for approval, if any, necessary to bring the plans into compliance with any applicable ordinance or regulation. Conditions for approval may also be designed to eliminate any adverse effects of the proposed development on aspects of the general health, safety, and welfare of the community for which the official or consultant has special responsibility.

(3) Decision. Within forty-five (45) days of the public meeting on the application, unless an extension of this time is agreed to by the applicant, the Board of Adjustment shall render a decision either to grant the application for a Conditional Use Permit, grant it subject to conditions, or deny it. Failure of the Board of Adjustment to act within this time period shall constitute an approval of the application.

(4) Denial. The application shall be denied if the Board of Adjustment finds any of the following:

(a) The application and record fail to establish compliance with the standards made applicable to the proposed development by the provisions of this Ordinance.

(b) The proposed use, developed in the proposed manner, and at the proposed location, would be inconsistent with the standards pursuant to the provisions of this Ordinance.

(c) The adverse impacts on the overall public health, safety, and welfare are not balanced by the public or private benefits of the proposal. The Board of Adjustment shall include in this balance, any proposals of the applicant and any conditions that it might impose on the development, pursuant to the provisions of this Ordinance, to ameliorate problems associated with the development.

(5) Conditions and Restrictions. The Board of Adjustment may, in approving the application for any Conditional Use Permit, impose such restrictions and conditions on such approval, the proposed use, and the premises to be developed or used pursuant to such approval as it determines are required by the general purposes, goals, and objectives of the Comprehensive Plan and this Ordinance to prevent or minimize adverse effects from the proposed use and development on other properties in the neighborhood and on the general health, safety, and welfare of the County. All conditions imposed upon any Conditional Use Permit approval, with the exception of conditions made applicable to such approval by the express terms of this Ordinance, shall be expressly set forth in the granting of such Conditional Use Permits.

Section 4. Conditions on Conditional Use Permit Approvals

Every Conditional Use Permit shall be dependent upon the proposed development fully complying with all the requirements of this Ordinance and, where applicable, with the Polk County Subdivision Ordinance.

The Board of Adjustment may also attach any other conditions deemed appropriate to the granting of approval including conforming to a specific site plan.

Section 5. Violations

A violation of any condition or restriction in a Conditional Use Permit is a violation of this Ordinance and is punishable pursuant to the provision of this ordinance. Additionally the Board of Adjustment is empowered to revoke any Conditional Use Permit if it determines that the conditions or restrictions are being violated.

Division 9. Agricultural Exemption

No regulation or requirement contained in this Ordinance shall be construed to apply to land, farm houses, farm barns, farm outbuildings, or other buildings, structures, or erections which are primarily adapted, by reason of nature and area, for use for agricultural purposes, but only while so used.

Section 1. Determination

To be agricultural exempt, a property that is less than seventy (70) acres must prove the use is primarily adaptive for agricultural purposes by filing an Agricultural Exemption Application provided by Polk County. Upon submittal of the completed application the Zoning Administrator shall conduct a review of the information and provide a written determination to the applicant stating whether the exemption was granted or denied.

(A) Upon approving an application, permit applications and information for proposed structures are required but fees will only be collected if inspections are requested by the owner.

(B) Upon denial of an application, all requirements of this Ordinance that pertain must be met.

Section 2. Exceptions to Exemption

(A) Floodplain regulations that relate to any structure, building, dam, obstruction, deposit or excavation in or on a flood plain shall apply to any use.

(B) Health regulations for on-site wastewater septic systems and wells shall apply to any use.

Article 5. District Performance Standards

Division 1. Purpose

All proposed land uses must meet the basic performance standards of the district and the site capacity calculations contained in this Article. This Article is organized with the district standards for residential development along with a Calculation Worksheet, a separate division for nonresidential development and corresponding Calculation Worksheet.

All uses and activities shall comply fully with the provisions of the following standards as a precondition of being permitted pursuant to Table of Uses.

Division 2. Development Standards

The standards for residential uses in all districts are presented in Division 3. The standards for all nonresidential uses are presented in Division 4. The bulk standards relating to all development are contained in Article 6 of this Ordinance.

Division 3. Residential Performance Standards

This Division contains the basic performance standards applicable to single-family, cluster, planned residential developments, mobile home parks, and institutional residential where such uses are permitted by Table of Uses of this Ordinance.

Section 1. Minimum Requirements

The standards of this Division are minimum standards and shall apply to each district and use therein. All standards must be met.

Section 2. Minimum Services

Public sewer is required for many residential development options. In areas where public sewer is not available but is required, an on-site system may be installed, providing that such system is designed so that it may be connected to a public sewer system when one becomes available. If public sewer is “available,” as defined by the Code of Iowa, connection must be made. Public water shall be connected, where available, if not available wells are permitted. Lots of less than 20,000 sq. ft. require public water. Lots of less than 15,000 sq. ft. require public water and public sewer.

Section 3. Residential Development Calculations Worksheet

The worksheet found on page 78 determines base site, natural resource protection area, minimum district open space, maximum net density, and maximum gross density.

The worksheet shall be completed and submitted for any proposed residential development.

Section 4. Required Calculations

(A) Base Site Calculation

Determine the base site area which is the gross site area minus adjacent road right of way, and/or different development options and/or different zoning district area on the same site.

(B) Natural Resource Protection Calculations

(1) All land area consisting of the natural resources or natural features, lying within the base site area, shall be measured.

(2) The total acreage of each resource shall be multiplied by its required protection level to determine the amount of resource protection land or area required to be kept in open space in order to protect the natural resource on the site.

(a) If two or more resources overlap on the same area of land, only the most restrictive (highest protection percentage) shall be used.

(b) Where the provisions for mitigation are to be used, those areas to be disturbed shall not be counted in this calculation but the relocation area if on site, shall be included.

(C) Minimum District Open Space Calculation

Determines the minimum proportion of the site required to be open space.

(D) Net Buildable Area Calculation

Determines the net buildable area of the site. This is completed by subtracting the greater of natural resource protection calculation or minimum district open space calculation from the base site area. Natural Resources protection requirements must be met at all times for all projects.

(E) Maximum Net Density Calculation

Determines the maximum number of permitted units within the buildable portion of the site by multiplying the corresponding value assigned to zoning district and development option times the net buildable area for the site.

(F) Maximum Gross Density

Determines the maximum number of units that may be placed on the overall acreage of the site by multiplying the corresponding value assigned to zoning district and development option times the base site area.

(G) Maximum Lots (development potential) permitted

The results of Maximum Net Density Calculation and Maximum Gross Density calculations are compared, and the lowest of the two development yields is chosen. This number rounded down determines the number of lots permitted for the development.

Table 5.1 Residential Density Standards

Zoning District and Development Option	Min. OSR	Max. GD	Max. Net Density	Min. Site Area	Min. Lot Area	Minimum Required Water/ Sewer
AG & AT						
Single Family	.00	.029	.029	35 ac.	35 ac.	WL/ST
Cluster	.95	.029	.930	35 ac.	40,000 sf	WL/ST
ER						
Single Family	.00	.34	.34	3 ac.	3 ac.	WL/ST
Cluster	.65	.38	1.210	10 ac.	30,000 sf	WL/ST
RR						
Single Family	0	1	1	40,000 sf.	40,000 sf	PW/ST
Cluster	.25	1.15	1.8	10 ac.	20,000 sf	PW/ST
Planned	.35	1.25	2.1	20 ac.	*	PW/PS
LDR						
Single Family	0	3	3	12,000 sf	12,000 sf	PW/PS
Cluster	.40	4	7	5 ac.	8,500 sf	PW/PS
Planned	.40	4	7	10 ac.	*	PW/PS
MDR						
Single Family	0	5	5	8500 sf	8500 sf	PW/PS
Planned	.25	15	20	10 ac.	*	PW/PS
HDR						
Planned	.25	15	20	3 ac.	*	PW/PS
MOBILE HOME PARK (MP)						
Mobile Home Park	.25	6.25	9	10 ac.	4,000 sf	PW/PS
Mixed Use						
Single Family	0	5	5	8500 sf	8500 sf	PW/PS
Planned	.25	5	8	3 ac.	*	PW/PS

Key to Table 5.1

Minimum Open Space Ratio (OSR) - is the minimum proportion of the site required to be open space.

Maximum Gross Density (GD) is the value used to determine the maximum number of units that may be placed on the overall acreage of the site.

Maximum Net Density is the value used to determine the maximum number of permitted units within the buildable portion of the site.

Minimum Lot Area is the smallest allowed lot size allowed for this zoning district and use. Where septic tanks will be used, it assumes that adequate soils are present.

Minimum Services - This column indicates the type of disposal required for each particular zoning district and use. **The code is**: ST - On-Site System, PS - Public Sewer, WL - Well, private, PW - Public Water. WL/PS and PW/ST are also permitted combinations.

* See planned options for housing unit types and lot size.

Residential Development Calculation Worksheet 5.1

Project Name	
Zoning District	
Development Option	

A. Base Site Area Calculation

Development site area as determined by actual land survey.			acres
less right of way, different development option, different zoning			acres
Equals base site area	**(a)**		acres

B. Natural Resources Calculations

multiply minimum protection % (1) and acres of base site in resource (2) to obtain protection required (3)

Resource Natural Feature	(1) Minimum Protection %	(2) Acres in Resource	(3) Resource Protection	
Floodplains -Floodway	100%			acres
Floodplains -Floodway Fringe	75%			acres
Drainageway	75%			acres
Woodlands - Mature	75%			acres
Woodlands -Young	50%			acres
Native Prairie	100%			acres
Wetlands	100%			acres

add calculated resource protection for each feature in column (3) to obtain total

* If resources overlap on the same area of land, only the most restrictive shall be used.

** Where mitigation allowed, disturbed area not counted but on site relocation area is

Total Acres in Resource Protection	**(b)**		acres

C. Minimum District Required Open Space Calculation

Base site area	**(a)**		acres
multiply times development option minimum open space ratio (see table 5.1)			
Required Open Space	**(c)**		acres

D. Net Buildable Site Area Calculation

Base site area	**(a)**		acres
Subtract acres in Resource Protection or Required Open Space (whichever is greater)	**(b) or (c)**		
Net Buildable Site Area	**(d)**		acres

E. Site Specific Maximum Net Density Yield Calculation

Net Buildable Site Area	**(d)**		acres
multiply times Maximum Net Density (see density standard table 5.1)			
Site Specific Maximum Density Yield (round down)	**(e)**		lots

F. District Maximum Gross Density Yield Calculation

Base site area Take	**(a)**		acres
multiply times Maximum Gross Density (see density standard table 5.1)			
District Maximum Density Yield (round down)	**(f)**		lots

G. Maximum Lots permitted for Site

Site Maximum Density Yield or District Maximum Density Yield (whichever is lower) equals maximum number of lots permitted for development		lots

Division 4. Non-Residential Performance Standards

This Division contains the basic standards applicable to all nonresidential uses as permitted by district. The standards in this Section regulate the maximum intensities permitted in each district. Nonresidential uses are regulated on Open Space Ratios (OSR) and Floor Area Ratios (FAR). These intensities may not be achievable if the site is limited by Natural Resource Protection Requirements.

Section 1. Minimum Requirements

The standards of this Division are minimum standards and shall apply to each district and use therein. All standards must be met.

Section 2. Minimum Service

Public sewer is required for most non-residential development options. In areas where public sewer is not available but is required, an on-site system shall be installed, providing that such system is designed so that it may be connected to a public sewer system when one becomes available. Public water shall be connected, where available, if not available wells are permitted. Lots of less than 20,000 sq. ft. require public water. Lots of less than 15,000 sq. ft. require public water and public sewer.

Section 3. Non-Residential Development Calculations Worksheet

(A) The worksheet 5.2 determines base site, natural resource protection area, minimum district open space, open space required and maximum floor area ratio.

(B) The worksheet shall be completed and submitted for any proposed non-residential development.

Section 4. Required Calculations

(A) Base Site Calculation

Determine the base site area which is the gross site area minus adjacent road right of way, property in other zoning district or uses.

(B) Natural Resource Protection Calculations

(1) All land area consisting of the natural resources or natural features, lying within the base site area, shall be measured.

(2) The total acreage of each resource shall be multiplied by its required protection level to determine the amount of resource protection land or area required to be kept in open space in order to protect the natural resource on the site.

(a) If two or more resources overlap on the same area of land, only the most restrictive (highest protection percentage) shall be used.

(b) Where the provisions for mitigation are to be used, those areas to be disturbed shall not be counted in this calculation but the relocation area if on site, shall be included.

(C) Minimum District Open Space Calculation

Determines the minimum proportion of the site required to be open space.

(D) Open Space Requirement

Determines the amount of open space required on the site by taking the greater of Natural Resource Protection acres and Minimum District Open Space acres. Natural Resources on the site must be protected to meet the requirements of the ordinance at all times.

(E) Maximum Floor Area Ratio Calculation

Determines the maximum floor area allowed on the site by multiplying the corresponding value assigned to zoning district and development option times the base site area.

Table 5.2 Non-Residential Development Performance Standards

Zoning District	Minimum OSR %	Maximum FAR %	Minimum Services Required
AG - Agricultural District	90%	4%	WL/ST
AT - Agricultural Transition District	90%	4%	WL/ST
ER - Estate Residential District	75%	8%	WL/ST
RR – Rural Residential District	50%	25%	WL/ST
LDR – Low Density Residential District	50%	25%	PW/PS
MDR – Medium Density Residential District	50%	25%	PW/PS
HDR – High Density Residential District	50%	25%	PW/PS
MU – Mixed Use District	25%	45%	PW/PS
NB – Neighborhood Business	35%	25%	PW/ST
GC – General Commercial District and **LI** – Light Industrial District			
institutional	45%	25%	PW/PS
office	35%	35%	PW/PS
commercial	35%	35%	PW/PS
light industrial	35%	35%	PW/PS
all other	35%	35%	PW/PS
HI- Heavy Industrial District			
institutional	35%	25%	PW/PS
office	25%	40%	PW/PS
commercial	25%	40%	PW/PS
industrial	25%	40%	PW/PS
all other	30%	40%	PW/PS
OS – Open Space District	90%	4%	WL/ST

Key to Table of Non-Residential Performance Standards

Minimum Open Space Ratio (OSR) is the minimum % of the site which must be kept in vegetated areas, green space, and lawns.

Maximum Floor Area Ratio (FAR) the maximum % of floor area to site area.

Minimum Services Required This code indicates the minimum type of water supply and sewage disposal systems which are required for the site. **The code is**: ST - On-Site System, PS - Public Sewer, WL - Well, private, PW - Public Water. WL/PS and PW/ST are also permitted combinations.

Non- Residential Development Calculation Worksheet 5.2

Project Name			
Zoning District			
Development Type			
NAICS Code(s)	Website: http://www.census.gov/epcd/naics02/		

A. Base Site Area Calculation

Development site area as determined by actual land survey.			acres
less right of way, different development option, different zoning			acres
Equals base site area	**(a)**		acres

B. Natural Resources Calculations

multiply minimum protection % (1) and acres in resource (2) to obtain protection required (3)

Resource Natural Feature	(1) Minimum Protection %	(2) Acres in Resource	(3) Resource Protection	
Floodplains -Floodway	100%			acres
Floodplains -Floodway Fringe	75%			acres
Drainageway	75%			acres
Woodlands - Mature	75%			acres
Woodlands -Young	50%			acres
Native Prairie	100%			acres
Wetlands	100%			acres

add calculated resource protection for each feature in column (3) to obtain total

* If resources overlap on the same area of land, only the most restrictive shall be used.

** Where mitigation allowed, disturbed area not counted but on site relocation area is

Total Acres in Resource Protection	**(b)**		ac/sq ft

C. Minimum District Required Open Space Ratio Calculation

Base site area	**(a)**		acres
multiply times Minimum Open Space Ratio (OSR) see table 5.2			
Minimum District Open Space	**(c)**		sq ft

D. Required Open Space

Take Resource Protection or Minimum Open Space (whichever is greater) equals amount of base site required to be in open space and/or resource protection	**(b) or (c)**		sq ft

E. Maximum Floor Area Ratio

Take base site area	**(a)**		
multiply times Maximum Floor Area Ratio (see table 5.2)			acres
Maximum Floor Area allowed	**(d)**		sq ft

Summary

A.	Base Site	**(a)**		ac/sq ft
D.	Open Space Required			sq ft
E.	Maximum Floor Area allowed	**(d)**		sq ft

Article 6. Bulk and Use Standards

Division 1. Purpose

The purpose of this Article is to provide the standards that apply to individual uses. These include basic bulk standards which apply to individual uses and for single-family detached and cluster developments by zoning districts.

Division 2. Single-Family Residential Bulk Standards

The Table of Single Family Bulk Standards provides the standards that govern the construction of single-family dwelling units in single-family developments in the various Residential districts including Cluster Single Family Residential Bulk Standards. Cluster lots consist of fully detached, single-family residences located on individual lots. Different lot standards apply depending upon the district in which the cluster lot is located. All cluster lots must be located within a cluster development as permitted and conform to the residential performance standards contained in Article 5 of this Ordinance. Legal Lots of record which are less than the current district minimum lot size shall meet the Cluster Development maximum building coverage requirements.

Table 6.1 Table of Single-Family Bulk Standards (Standard & Cluster & Mobile Home)

Standard Single Family Regulations									
					Setbacks			**Maximum Building Height**	**Maximum Building Coverage**
Zoning District		**Lot size**		**Lot Width**	**Front**	**Side**	**Rear**		
Agricultural	AG	35	ac	600	50	25	50	40	5%
Agricultural Transition	AT	35	ac	600	50	25	50	40	5%
Estate Residential	ER	3	ac	225	75	25	75	35	8%
Rural Residential	RR	40000	sf	140	50	15	50	35	15%
Low Density Residential	LDR	12000	sf	75	35	10	35	35	30%
Medium Density	MDR	8500	sf	60	30	8	30	35	40%
High Density	HDR	8500	sf	60	30	8	30	35	40%
Mixed Use	MU	8500	sf	60	30	8	30	35	40%
Cluster Development Option Single Family Regulations									
				Cluster Lot Width	**Setbacks**			**Maximum Building Height**	**Maximum Building Coverage**
Zoning District		**Lot Size**			**Front**	**Side**	**Rear**		
Agricultural	AG	40000	sf	140	50	15	50	35	15%
Agricultural Transition	AT	40000	sf	140	50	15	50	35	15%
Estate Residential	ER	30000	sf	115	30	15	30	35	22%
Rural Residential	RR	20000	sf	100	30	10	30	35	30%
Low Density Residential	LDR	8500	sf	60	30	8	30	35	40%
Mobile Home Regulations									
					Setbacks			**Maximum Building Height**	**Maximum Building Coverage**
Zoning District		**Lot Size**		**Lot Width**	**Front**	**Side**	**Rear**		
Mobile Home District	MH	NA		40	20	5	20	20	

Division 3. Bulk Standards for Planned Developments.

Planned Developments allow for a variety of housing types with varying bulk standards. Planned Developments must meet the development option requirements found in Residential Density Standards Table 5.1. All residential lots in planned developments shall comply with the following standards for each dwelling type. These bulk standards are unit type specific that will vary from the standard bulk regulations for the zoning district. Single Family areas are permitted in a planned development meeting standard development options for the specific zoning district.

Section 1. Bi-attached House

This dwelling type consists of a semi-detached dwelling for a single family. It has only one (1) dwelling unit from ground to roof and only one (1) wall in common with another dwelling unit. Ownership is of a parcel and house. The following table specifies the minimum standards for a bi-attached house. A bi-attached house is permitted only in planned developments.

Table 6.2

A = Minimum Lot Area	4,000	sq. ft.
B = Maximum Building Coverage	.44	
C = Maximum Building Height	35	ft.
D = Minimum Lot Width	50	ft.
Minimum Yards:		
E = Front lot line to house	20	ft.
F = Front Lot Line to Garage	10	ft.
G = Side	10	ft.
H = Rear	15	ft.
I = Off-street Parking Spaces	2.5	spaces per du

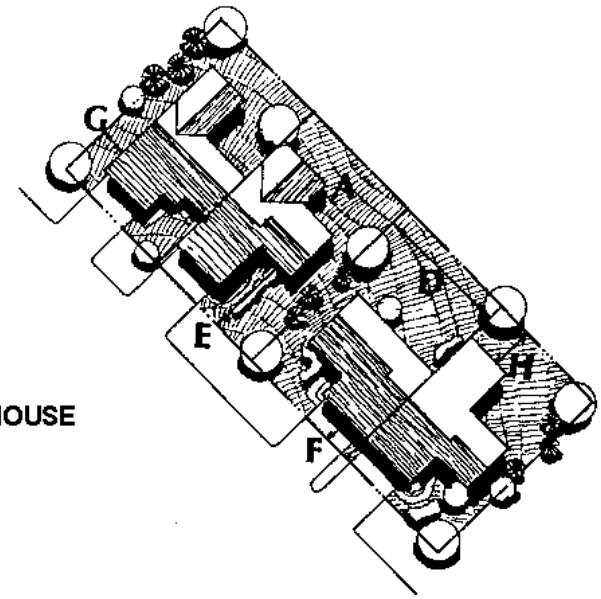

BI-ATTACHED HOUSE
SCALE 1":50'

Section 2. Townhouse

Townhouse. This dwelling type consists of a single-family attached unit, with a single unit going from ground to roof, and with individual outside access. Rows of attached townhouses shall be no more than ten (10) dwelling units. Ownership is of a structure and possible small area directly adjacent to unit. Townhouses may be located on a cul-de-sac or on an internal parking lot. The following table specifies the minimum standards for a townhouse. A townhouse is permitted only in planned developments.

Table 6.3

A = Minimum Lot Area	2,400	
B = Maximum Building Coverage	.67	
C = Maximum Building Height	28	ft.
D = Minimum Lot Width	25	ft.
Minimum Yards:		
E = Front to dwelling	20	ft.
F = Front to garage	5	ft.
G = Parking lot to dwelling	15	ft.
H = Rear	15	ft.
I = Off-street Parking Spaces	2.5	spaces per du
J = Min. Peripheral Setback (for entire development)	40	ft.

TOWNHOUSE

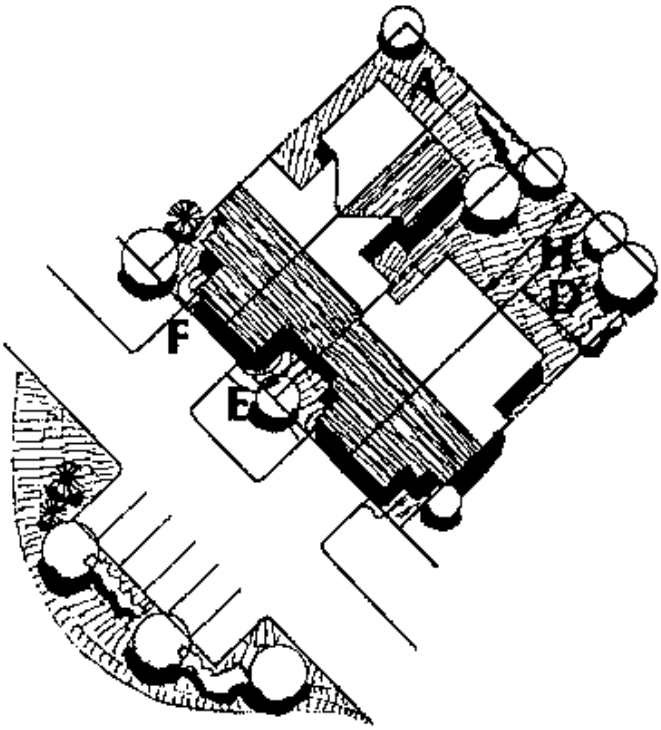

Section 3. Brownstone Townhouse

Brownstone Townhouse. This dwelling type consists of a single-family attached unit, with a single unit going from ground to roof, and with individual outside access. Rows of attached townhouses shall average no more than ten (10) dwelling units. Brownstone Townhouses are modeled after early 20th century row house units. Ownership is of a structure and possible small area directly adjacent to unit. The following table specifies the minimum standards for a townhouse. A brownstone townhouse is permitted only in planned developments.

Table 6.4

A = Minimum Lot Area	750	sf
B = Maximum Building Coverage	1.0	
C = Maximum Building Height	40	ft.
D = Minimum Lot Width	20	ft.
Minimum Yards:		
E = Front to dwelling	15	ft.
H = Rear	15	ft.
I = Off-street Parking Spaces	2.0	spaces per du
J = Min. Peripheral Setback (for entire development)	15	ft.

Section 4. Detached Townhouse

Detached Townhouse. This dwelling type consists of a single-family residence which is fully detached from neighboring structures and is intended to be apart of a owners association for yard maintenance and snow removal. Ownership is of a structure and possible small area directly adjacent to unit. Units must front onto a public street. A detached townhouse is permitted only in planned developments.

Table 6.5

A = Minimum Lot Area	4000	sf
B = Maximum Building Coverage	.40	
C = Maximum Building Height	35	ft.
Minimum Yards:		
E = Front to dwelling	25	ft.
F = Front to garage	25	ft.
G = Side	5	ft.
H = Rear	25	ft.
I = Off-street Parking Spaces	2.0	spaces per du

Section 5. Conservation House

Conservation House. This dwelling type is a single family residence which is fully detached from neighboring structures. The Conservation House is distinguished by small front, rear, and side yard setbacks. These smaller setbacks allow for a maximum amount of open space to be created within the development area by consolidating open space from individual lots into larger common areas. Ownership is of a parcel and a house. The following table specifies the minimum standards for a Conservation House. A Conservation house is only permitted in planned development.

Table 6.6

A = Minimum Lot Area	6000	
B = Maximum Building Coverage	.60	
C = Maximum Building Height	35	ft.
D = Minimum Lot Width	60	ft.
Minimum Yards:		
E = Front to dwelling	20	ft.
F = Front to garage	20	ft.
G = Side	5	ft.
H = Rear	10	ft.
I = Off-street Parking Spaces	2.0	spaces per du

Section 6. Apartment Buildings

Apartment / Condominium Buildings. Buildings comprising multiple dwelling units which share common access to individual units and yards. The minimum lot area required shall be the sum of the areas required for each unit within the structure. Apartments shall contain three (3) or more units in a single structure. Units may be for rent (Apartment) or individual ownership with an owners association (Condominium) The following table specifies the minimum standards for apartment buildings. Apartment buildings are permitted only in planned developments.

Table 6.7

A = Minimum Lot Area	(1 story) 2,000	sq. ft.
(per dwelling unit)	(2 story) 1,800	sq. ft.
	(3 story) 1,600	sq. ft.
B = Maximum Building Coverage	.75	
C = Maximum Building Height	45	ft.
Minimum Yards:		ft.
D = Street to dwelling	30	ft.
E = Parking lot to dwelling	12	ft.
F = Side	15	ft.
G = Rear	20	ft.
H = Min. Lot Width per structure	100	ft.
I = Parking Spaces	2	spaces per unit
J = Min. Peripheral Setback		
(for entire development)	50	ft.

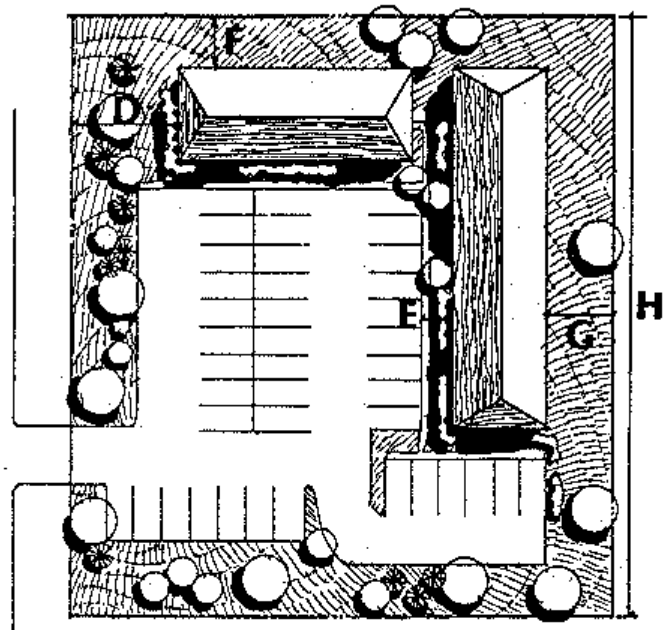

APARTMENTS 1":50'

Division 4. Bulk Standards for Mobile Home Park

Mobile Home Standards. This dwelling unit type is distinguished from other single-family unit types in that it is mobile. Also, this type of unit is distinguished from other manufactured homes in that it is located within a subdivision designed specifically for mobile homes called a mobile home park. This type of dwelling unit is permitted only within the Mobile Home Park Zoning District. This district is mapped only through the rezoning process. The following table specifies the minimum standards for a mobile home unit within a Mobile Home Park. These standards apply to both existing mobile home parks and to new mobile home parks. A site plan is required for any new or expansion to a mobile home park.

Table 6.8

	Without Accessory Building		With Accessory Building	
A = Minimum lot area	4,000	sq. ft.	5,500	sq. ft.
B = Maximum building coverage	.43		.37	
C = Maximum building height	20	ft.	20	ft.
Minimum yards				
D = Front to house	20	ft.	30	ft.
E = Front to Accessory	--		20	ft.
*F = Side	5/15	ft.	5/15	ft.
G = Rear	20	ft.	20	ft.
H = Minimum lot width	40	ft.	50	ft.
I = Off-street parking spaces	2	spaces per unit	2	spaces per unit
J = Accessory to unit or deck	--	--	10	ft.
K = Accessory to adjacent unit	--	--	15	ft.
L = Accessory to rear	--	--	5	ft.
M = Accessory to side	--	--	5	ft.

*minimum 5 ft. one side with total 15 ft.

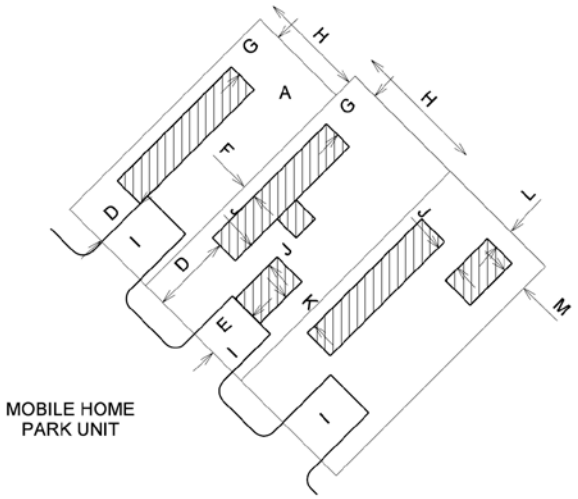

Division 5. Non-Residential Bulk Standards

All nonresidential uses shall comply with the following minimum bulk requirements. Side and rear yard setbacks are calculated by using the minimum peripheral setback plus the minimum standard side and rear yard setback. The minimum peripheral setback is the additional distance a building must be set from a different zoning district line or from a different development option within the same district as required in the Landscaping Requirements. The minimum building spacing shall be applied to buildings within the same parcel.

Table 6.9 Nonresidential Bulk Standards (measured in feet)

	Minimum Street Setback							
Zoning District use class	**Expressway/ Freeway**	**Other Principal Arterial**	**Minor Arterial/ Major Collector/ Minor Collector**	**Local**	**Standard Min. Side & Rear Setback (ft.)**	**Min. Peripheral Setback ***	**Min. Building Spacing**	**Maximum Building Height**
AG/AT								
agricultural	75	75	50	50	15	0	0	135
commercial	75	75	50	50	15	25	30	45
ag support	75	75	50	50	15	25	30	135
all other	75	75	50	50	15	25	30	45
ER	75	75	50	50	15	15	30	35
RR	75	75	50	50	15	15	30	35
LDR	75	75	50	50	15	15	30	35
MDR	75	75	50	50	15	15	30	35
HDR	75	75	50	50	15	15	30	40
MU	75	75	50	50	15	15	30	45
NB	75	75	50	50	15	15	30	30
GC	75	75	50	50	15	15	30	35
LI	75	75	50	50	15	15	30	45
HI	75	75	50	50	15	15	30	45
OS	75	75	50	50	15	15	30	35

**Both minimum peripheral setback and standard setback required on side(s) and rear when adjacent to different zoning district or development option.*
Cell Tower equipment buildings at the base of commercial communication towers are required to be separated by 10 feet.

Division 6. Exceptions to Dimensional Requirements for Buildings and Structures

Section 1. Structures Permitted Above Height Limits

Except as otherwise prohibited by airport height limitations, the height limitations of this Ordinance shall not apply to:

(A) Church spires, belfries, cupolas and domes not intended for residential purposes.

(B) Monuments, water towers, observation towers, power transmission towers, communication towers, wind energy conversion system, grain elevators, chimneys, smokestacks, derricks, conveyors, flag poles, masts and aerials attached to buildings and similar structures, provided such structures meet other regulations.

(C) Ham and citizen band radio towers may not exceed the zoning district height by more than thirty (30) feet.

Section 2. Encroachments and Projections in the Required Setback

Except as otherwise provided, the following encroachments are permitted in the required setbacks provided there is no obstruction of any sight distance.

(A) Landscaping features including ornamental pools, planting boxes, sculpture, arbors, trellises, birdbaths, and similar uses;

(B) At grade patios, play equipment, outdoor furniture, ornamental entry columns and gates, flag poles, lamp posts, HVAC equipment, mailboxes, outdoor fire places, public utility wires and poles, pumps and wells, and fences or retaining walls;

(C) Handicapped ramps;

(D) Gatehouses/guardhouses less than one hundred twenty (120) square feet;

(E) Bus shelters less than 50 square feet in AG, AT, ER, and RR or as proposed at time of development or by Homeowners Association. Bus Shelters shall be removed if no longer used as a bus shelter;

(F) Cornices, steps, overhanging eaves, and gutters, window sills, bay windows or similar architectural features, chimneys and fireplaces, fire balconies, and fire escapes projecting no more than two and one half (2 ½) feet into any required setback, but in no case closer than three (3) feet to any property line;

(G) Uncovered porches may encroach five (5) feet or less into the front setback

(H) Egress window wells are allowed to encroach into the side and rear setback but cannot be closer than three (3) feet to any property line;

(I) Uncovered porches (not enclosed) may encroach up to fifty (50%) of the rear setback.

Section 3. Easement Encroachments

Utility and drainage easements shall be kept free and clear of any buildings or other improvements except as follows:

(A) Fences, at grade landscaping, and pavement, which do not obstruct drainage within the easement, water related control structures and soil erosion measures may be located in utility and drainage easements, if all other zoning conditions can be met.

(B) Polk County shall not be liable for damages to an improvement located within an easement area caused by installation, repair, maintenance or replacement of utilities located therein by other governmental agencies or private utilities.

Division 7. Street Frontage

Section 1. Single Family Residential, including townhouses

(A) No lot shall contain any building used in whole or in part for single-family residential purposes unless such lot abuts for at least forty (40) feet on at least one (1) public street.

(B) One dwelling structure, either a single-family, cluster single family, or planned single-family development option are permitted per lot.

(C) Each dwelling structure is to take access from the portion of property abutting a public street.

(D) Access shall not be made off the end of a dead end street.

Section 2. Apartments and non-residential development

Apartments and non-residential development are not required to meet the frontage requirement where access is provided by a private drive or an easement through an adjacent property to a public street.

Article 7. Natural Resource Protection

Division 1. Purpose

The intent of this Article is to provide standards for the protection of natural resource, during, and after the development process, with the efficient integration of new development into the community.

Division 2. Applicability

The standards of this Article shall apply to all development in all districts, to each site at the time of a development proposal with the exceptions listed below. The design of all subdivision or land development in Polk County shall conform to these minimum protection standards to ensure that the development assists in preserving and adding to the natural resources of the County and its neighborhoods.

Division 3. Natural Resource Protection Standards

All natural resources defined herein shall be protected by the standards of this Article. The following sections specify the environmental protection standards applicable to selected natural resources and other standards designed to control specific resource problems.

Division 4. Natural Resources

Floodplains, mature woodlands, young woodlands, drainageways, streams, wetlands, and native prairies shall be protected as required in the following sections.

Section 1. Floodplains

(A) Statutory Authority and Findings of Fact

(1) The Legislature of the State of Iowa has in Chapter 335, Code of Iowa, as amended, delegated the power to counties to enact zoning regulations to secure safety from flood and to promote health and general welfare.

(2) The flood hazard areas of Polk County are subject to periodic inundation which can result in loss of life and property, health and safety hazards, disruption of commerce and governmental services, extraordinary public expenditures for flood protection and relief, and impairment of the tax base; all of which adversely affect the peace, safety, health, welfare, comfort, and convenience of its residents.

(3) These flood losses, hazards, and related adverse effects are caused by:

(a) the occupancy of flood hazard areas by uses vulnerable to flood damages which create hazardous conditions as a result of being inadequately elevated or otherwise protected from flooding; and

(b) the cumulative effect of obstructions on the floodplain causing increases in flood heights and velocities.

(4) The provisions of this Section rely upon engineering methodology for analyzing flood hazards which are consistent with the standards established by the

Department of Natural Resources.

(B) Statement of Intent

It is the purpose of this Section to protect and preserve rights, privileges and property of Polk County and its residents and to preserve and improve the peace, safety, health, welfare, and comfort and convenience of its residents by minimizing those flood losses described in Subsection A.2, above, with provisions designed to:

(1) Reserve sufficient floodplain area for the conveyance of flood flows so that flood heights and velocities will not be increased substantially; and

(2) Restrict or prohibit uses which are dangerous to health, safety or property in times of flood or which cause excessive increases in flood heights or velocities; and

(3) Require that uses vulnerable to floods, including public utilities which serve such uses, be protected against flood damage at the time of initial construction or substantial improvement; and

(4) Protect individuals from buying lands which are unsuited for intended purposes because of flood hazard; and

(5) Assure that eligibility is maintained for property owners in the County to purchase flood insurance through the National Flood Insurance program.

(C) Determination

(1) The Flood Insurance Rate Maps (FIRMs), for Polk County and Incorporated Areas dated February 1, 2019, and later as revised, which were prepared as part of the Polk County Flood Insurance Study, shall be used to identify the special flood hazard areas. All areas shown thereon to be within the boundaries of the 1% Annual Chance (100-year) flood zone shall be considered as having significant flood hazards. The location of special flood hazard areas shall be determined on the basis of the 1% Annual Chance flood elevation at the particular site in question. The Polk County Flood Insurance Study is hereby adopted by reference and is made part of this Ordinance for the purpose of administering floodplain management regulations. The Flood Insurance Rate Maps are on file and available at Polk County Public Works Department.

(2) In all instances (except as noted below), on-site topographic surveys, conducted by a registered land surveyor or engineer, shall be performed to locate the precise floodplain line on a parcel. The survey shall use the flood profile contained in the sources listed above. Such a survey shall not be required if the proposed structure(s) is not located within the following distances of the boundary of the 1% Annual Chance floodplain or flood of record:

Map Scale	Distance
1” = 500’	100’
1” = 1000’	200’
1” = 2000’	400’

(D) Compliance

No structure or land shall hereafter be used and no structure shall be located, extended, converted, or structurally altered without full compliance with the terms of this Section and other applicable regulations which apply to uses within the jurisdiction of this Section.

(E) Abrogation and Greater Restrictions

It is not intended by this Section to repeal, abrogate or impair any existing easements, covenants, or deed restrictions. However, where this Section imposes greater restrictions, the provisions of this Section shall prevail. All other ordinances inconsistent with this Section are hereby repealed to the extent of the inconsistency only.

(F) Interpretation

In their interpretation and application, the provisions of this Section shall be held to be minimum requirements and shall not be deemed a limitation or repeal of any other powers granted by State statutes.

(G) Warning and Disclaimer of Liability

The degree of flood protection required by this Section is considered reasonable for regulatory purposes and is based on engineering and scientific methods of study. Larger floods may occur on rare occasions. Flood heights may be increased by man-made or natural causes, such as ice jams and bridge openings restricted by debris. This Section does not imply that areas outside the regulated areas or that uses permitted within the regulated areas will be free from flooding or flood damages. This Section shall not create liability on the part of Polk County or any officer or employee thereof for any flood damages that result from reliance on this Section or any administrative decision lawfully made.

(H) Protection Levels

For all subdivisions and non-residential developments, the level of protection provided floodplains shall distinguish between the floodway and the floodway fringe (as designated on FIRM maps or determined by the required on-site survey.)

(1) Floodways - The channel of a river or stream and those portions of the flood plains adjoining the channel, which are reasonably required to carry and discharge flood waters or flood flows so that confinement of flood flows to the floodway area will not result in substantially higher flood levels and flow velocities, shall be provided with one-hundred (100) percent protection.

(2) Floodway fringes, the remainder of the floodplain, shall be provided with seventy-five (75) percent protection.

(3) All such protected areas shall be permanent open space. No uses or improvements other than those permitted herein shall be permitted in any area consisting of floodway as defined by this Ordinance.

(I) Use Regulations

(1) Uses Permitted within Floodways and Floodway Fringes as a Matter of Right without Additional Standards are permitted for natural areas not subject to any site disturbance.

(2) Uses Permitted Within Floodway Fringes as a Matter of Right Without Additional

Standards.

(a) All uses which are listed as a permitted use in the floodway fringe column Table 4.2 Uses in Open Space.

(b) All uses which are classified as agriculture, nursery, or outdoor recreation in permitted use table which do not involve a structure or filling.

(3) Uses Permitted Within Floodways and Floodway Fringes with Certain Additional Standards.

The following uses shall be permitted in Floodway and Floodway Fringe Areas if all applicable requirements of this section are met.

(a) Boat launching ramps, boat docks, piers, bridges and bridge approaches, marinas, and stormwater detention facilities.

(b) Boat houses, boat storage buildings and operations, and boat sales or rental structures (except boat or motor repair buildings or showrooms) associated with uses permitted under a., above.

(c) All uses which are classified as agriculture, nursery, or outdoor recreation in permitted use table and standards which involve either a structure or filling.

(d) Sand and gravel mining as otherwise permitted by law and this ordinance, except that buffering shall be by trees and shrubs only.

(4) Uses Permitted Within Floodway Fringes with Certain Additional Standards.

Uses permitted within the restrictions of this Ordinance and which meet all requirements of this Section, particularly J., General Floodplain Standards, shall be permitted within Flood Fringe Areas.

(J) Floodway Fringe Standards

All development located within the 1% Annual Chance floodway fringe must be consistent with the need to minimize flood damage. All development shall be certified by a professional engineer, registered in the State of Iowa, that all required conditions are met so as to withstand the flood depths, pressures, velocities, impact and uplift forces, and other factors associated with the 1% Annual Chance flood. Said certification shall also certify that any portion of a structure located below the 1% Annual Chance flood elevation shall be watertight and have walls which are substantially impermeable to the passage of water. A record of the certification, indicating the specific elevation (in relation to North American Vertical Datum 1988) to which any structures are flood proofed shall be maintained by the Zoning Administrator. The registered engineer shall also certify that the development meets all of the following conditions:

(1) Structures.

(a) All structures shall:

1) Be adequately anchored in accordance with the Polk County Construction Code requirements to prevent floatation, collapse, or lateral movement of the structure during a 1% Annual Chance flood.

2) Use construction methods and practices that will minimize flood

damage.

3) Use construction materials and utility equipment that are resistant to flood damage.

(b) All structures which are constructed or substantially improved after the date of adoption of this Ordinance shall meet the following conditions:

1) Fully enclosed areas below the lowest floor (not including lowest levels) that are subject to flooding shall be designed to automatically equalize hydrostatic flood forces on exterior walls by allowing for the entry and exit of floodwaters. Designs for meeting this requirement must either be certified by a professional engineer registered in the State of Iowa, or, meet or exceed the following minimum criteria:

a. A minimum of two (2) openings having a total net area of not less than one square inch for every square foot enclosed area subject to flooding shall be provided.

b. The bottom of all openings shall be no higher than one (1) foot above grade.

c. Opening may be equipped with screens, louvers, valves, or other coverings or devices provided that they permit the automatic entry and exit of floodwaters.

d. All such areas shall be used solely for parking of vehicles, building access and low damage potential storage.

2) New and substantially improved structures must be designed (or modified) and adequately anchored in accordance with the Polk County Construction Code requirements to prevent floatation, collapse, or lateral movement of the structure resulting from hydrodynamic and hydrostatic loads, including the effects of buoyancy, during a 1% Annual Chance flood.

3) New and substantially improved structures must be constructed with electrical, heating, ventilation, plumbing, and air conditioning equipment and other service facilities that are designed and/or located so as to prevent water from entering or accumulating within the components during conditions of flooding.

(c) All residential structures which are constructed or substantially improved after the date of adoption of this Ordinance shall have the lowest floor, including lowest level, elevated a minimum of one (1) foot above the 1% Annual Chance flood level. Construction shall be upon compacted fill which shall, at all points, be no lower than one (1) foot above the 1% Annual Chance flood level and extend at such elevation at least eighteen (18) feet beyond the limits of any structure erected thereon. Alternative methods of elevating, such as piers, may be allowed, subject to favorable consideration by the Department of Natural Resources, where existing topography, street grades, or other factors preclude elevating by fill. In such cases, the

methods used must be adequate to support the structure as well as withstand the various forces and hazards associated with the 1% Annual Chance flood.

(d) All nonresidential structures which are constructed or substantially improved after the date of adoption of this Ordinance shall have the first floor, including lowest level, elevated a minimum of one (1) foot above the 1% Annual Chance flood level, or (together with attendant utility and sanitary systems) be flood proofed to such a level.

(2) Utility and Sanitary Systems

(a) All new and replacement sanitary sewage systems shall be designed to minimize and eliminate infiltration of floodwaters into the system as well as the discharge of effluent into floodwaters. Wastewater treatment facilities shall be provided with a level of flood protection equal or greater than one (1) foot above the 1% Annual Chance flood elevation.

(b) On-site waste disposal systems shall be located or designed to avoid impairment to the system or contamination from the system during flooding.

(c) New or replacement water supply systems shall be designed to minimize or eliminate infiltration of floodwaters into the system. Water supply treatment facilities shall be provided with a level of protection equal or greater than one (1) foot above the 1% Annual Chance flood elevation.

(d) Utilities such as gas or electrical systems shall be located and constructed to minimize or eliminate flood damage to the system and the risk associated with such flood damaged or impaired systems.

(3) Vehicular Access

Vehicular access to any principal structure, by public roads, shall be elevated to a level which is one (1) foot above the 1% Annual Chance flood elevation and by private roads and driveways, it shall be elevated to a level which is one (1) foot above the 1% Annual Chance flood elevation, in order to ensure emergency and fire protection access during flood events.

(4) Installation of Fill Materials

Fill in excess of 500 cubic yards may be placed within the floodway fringe with detailed fill plans being submitted showing existing and proposed conditions. If a structure is to be placed on the fill, then the plans shall also show the structure. In considering the application, the Zoning Administrator shall determine whether the proposed fill meets both the general standards set forth in Stormwater Management and Erosion Control and the following additional standards:

(a) The cross-sectional area of a floodplain shall not be reduced by more than two and one-half (2.5) percent on either side of the centerline of the watercourse.

(b) Compensatory storage shall be provided to offset the storage lost through filling.

(c) All changes in velocity, depth of flood elevation, or storage shall be limited to the property of the owner doing the filling or those property owners who

have been granted flood or flow easements, provided that in no event shall an increase in flood elevation be permitted if it would affect any existing building or bring the lowest floor, including the lowest level (for residential structures) or the first floor (for nonresidential structures) to within three (3) vertical feet of the 1% Annual Chance flood elevation.

(d) In no instance shall the depth of fill in a floodway fringe exceed five (5) feet, nor shall any fill be placed within twenty-five (25) feet of the floodway or in a location which might be endangered by, or accelerate, a meander. In an inland depressional floodplain, the depth of fill measured from the natural grade to the new surface shall not exceed five (5) feet. Fill shall consist of soil or rock materials only; sanitary landfills shall not be permitted in any portion of a floodplain. Further, all fill areas shall be stabilized with material which will protect against erosion hazards, undercutting, and undermining.

(e) Filling on top of the following soils shall first require excavation to a base of clay before any such fill is installed: Adair, Colo, Rolfe, Ames, Cooper, Sharpsburg, Bauer, Gosport, Wabash, Clarinda, Humeston, Clearfield, and Okoboji

(5) Storage

(a) Storage of materials or equipment that are flammable, explosive or injurious to human, animal or plant life is prohibited unless elevated a minimum of three (3) feet above the 1% Annual Chance flood elevation.

(b) Other material and equipment must be:

1) similarly elevated or;

2) demonstrated and certified by a professional engineer registered in the State of Iowa that said storage area will not be subject to major flood damage and be anchored to prevent movement due to flood waters or;

3) readily removable from the storage area within the time available after flood warning.

(6) Flood Control Structures

Structures such as levees, flood walls, etc. which provide protection from a 1% Annual Chance flood shall have a minimum of three (3) feet of design freeboard and shall provide for adequate interior drainage. Structural flood control works shall be approved by the Department of Natural Resources when required.

(7) Drainage System Impacts

No development shall affect the capacity or conveyance of the channel or floodway or any tributary to the mainstream, drainage ditch, or other drainage facility or system.

(8) Subdivisions

All developments shall be designed and developed so as to be consistent with the need to minimize flood damages and shall have adequate drainage provided to reduce exposure to flood damage. Development associated with subdivision proposals (including the installation of public utilities) shall meet the applicable standards of this Ordinance. Proposals for subdivisions greater than five (5)

acres or fifty (50) lots (whichever is less) shall include 1% Annual Chance flood elevations data for those areas located within the floodway fringe.

(9) Mobile Homes

(a) All new and substantially improved factory-built homes, including those placed in existing mobile-home parks or subdivisions, shall be elevated on a permanent foundation such that the lowest floor of the structure is a minimum of one (1) foot above the 1% Annual Chance base flood elevation.

(b) All new and substantially improved mobile homes, including those placed in existing mobile home parks, shall be anchored to resist flotation, collapse, or lateral movement. Anchorage systems may include, but are not limited to, use of over-the-top or frame ties to ground anchors as required by the Polk County Construction Code.

(10) Accessory Structures to Residential Uses

(a) Detached garages, sheds and similar structures that are incidental to a residential use are exempt from the 1% Annual Chance flood elevation requirements where the following criteria are satisfied:

1) The structure shall be designed to have low flood damage potential. Its size shall not exceed 600 square feet. Those portions of the structure located less than one (1) foot above the 1% Annual Chance flood elevation must be constructed of flood-resistant materials.

2) The structure shall be used solely for low flood damaged potential purposes such as vehicle parking and limited storage. The structures shall not be used for human habitation.

3) The structure shall be constructed and placed on the building site so as to offer minimum resistance to the flow of floodwaters.

4) The structure shall be firmly anchored to prevent flotation, collapse and lateral movement which may result in damage to other structures.

5) The structures's service facilities such as electrical and heating equipment shall be elevated or flood proofed to at least one (1) foot above the 1% Annual Chance flood elevation.

6) The structure's walls shall include openings that satisfy the provisions of Section J (1)b of this Ordinance.

(b) Exemption from the 1% Annual Chance flood elevation requirements for such a structure may result in increased premium rates for flood insurance coverage of the structure and its contents.

(11) Recreational Vehicles

(a) Recreational Vehicles are exempt from the anchoring and elevation requirements of this Ordinance when the following criteria are satisfied:

1) The recreational vehicle is located on the site for less than 180 consecutive days and;

2) The recreational vehicle must be fully licensed and ready for highway use. A recreational vehicle is ready for highway use if it is on its wheels or jacking system and is attached to the site only quick disconnect-type utilities and security devices and has no permanently attached additions.

(K) Special Floodway Provisions

In addition to the Floodway Fringe Standards presented in J., above, development within the floodway shall meet the following applicable standards:

(1) No use or development shall be permitted in the floodway that would result in an increase in the 1% Annual Chance flood elevation. Consideration of the effects of any use or development on flood levels shall be based upon the assumption that an equal degree of development would be allowed for similarly situated lands.

(2) All uses located within the floodway shall:

(a) Be consistent with the need to minimize flood damage.

(b) Use construction and earthwork methods and practices that will minimize flood damage.

(c) Use construction materials and utility equipment that are resistant to flood damage.

(3) Structures, if permitted, shall have a low flood damage potential and shall not be used for human habitation.

(4) No storage of materials or equipment, except as provided for in I.3. above, shall be permitted in the floodway.

(5) No watercourse alterations or relocations (channel changes and modifications) of natural channels are permitted unless all engineering hydraulics have been submitted and approved by the appropriate review agencies.

(6) Utility and other pipelines that parallel or cross the floodway shall be buried in the streambed and banks, or otherwise sufficiently protected to prevent rupture due to channel degradation and meanderings.

(L) General Floodplain Provisions

In addition to the Floodway Fringe and Floodway Standards presented in J. and K., above, development within the general floodplain shall meet the following applicable standards:

(1) All development which involves the placement of structures, fill or other obstructions, storage of materials or equipment, excavation, or alteration of watercourse shall be reviewed by the Department of Natural Resources to determine whether the land is wholly or partially located within the floodway or floodway fringe and the 1% Annual Chance flood elevation. The applicant shall be responsible for providing the Department of Natural Resources with sufficient technical information to make the determination.

(2) Review by the Department of Natural Resources is not required for the proposed construction of new or replacement bridges or culverts where:

(a) The bridge or culvert is located on a stream that drains less than one hundred (100) square miles, and;

(b) The bridge or culvert is not associated with a channel modification that constitutes a channel change as specified in 567-71.2(1) b, Iowa Administrative Code.

(3) All development to be located in the floodway as determined by the Department of Natural Resources shall meet the Special Floodway Provisions of this ordinance.

(4) All development to be located in the floodway fringe as determined by the Department of Natural Resources shall meet the Floodway Fringe provisions of this Ordinance

(M) Shallow Flooding Provisions

In addition to the Floodway Fringe and Special Floodway provisions presented in sections J. and K., above, development with the shallow flood zones shall meet the following applicable standards:

(1) In shallow flooding areas designated as an AO Zone on the FIRMs, the minimum flood protection elevation shall be one (1) foot above the number of feet as specified on the FIRMs (or a minimum of 2.0 feet if no number is specified) above the highest natural grade adjacent to the structure.

(2) In shallow flooding areas designated as an AH Zone on the FIRMs, the minimum flood protection elevation shall be one (1) foot above the elevation specified on the FIRM.

(3) In shallow flooding areas designated as an AH and AO Zones on the FIRMs, drainage paths are required around structures on slopes to adequately guide water away from structures.

(N) Duties and Responsibilities of Zoning Administrator or designee for Floodplain Regulation Enforcement

(1) Review all floodplain development permit applications to assure that the provisions of this Ordinance will be satisfied.

(2) Review floodplain development applications to assure that all necessary permits have been obtained from federal, state and local governmental agencies including approval when required from the Department of Natural Resources for floodplain construction.

(3) Record and maintain a record of (i) the elevation (in relation to the North American Vertical Datum 1988) of the lowest floor (including basement) of all new or substantially improved structures or (ii) the elevation to which new or substantially improved structures have been floodproofed.

(4) Notify adjacent communities/counties and the Department of Natural Resources prior to any proposed alteration or relocation of a watercourse and submit evidence of such notifications to the Federal Emergency Management Agency.

(5) Keep a record of all permits, appeals and such other transactions and electronically kept correspondence pertaining to the administration of this Ordinance.

(6) Notify the Federal Insurance Administration of any annexations or modifications to the community's boundaries.

(7) Review subdivision proposals to ensure such proposals are consistent with the purpose of this Ordinance and advise the Zoning Commission of potential conflict.

(8) Perform site inspections to ensure compliance with the standards of this Ordinance.

(9) Forward all requests for Variances to the Board of Adjustment for consideration following the processes identified in Article 19. Ensure all requests include the information ordinarily submitted with applications as well as any additional information deemed necessary to the Board of Adjustment.

(O) Floodplain Development Permit Required

A Floodplain Development Permit issued by the Zoning Administrator shall be secured prior to initiation of any development in the floodplain.

(1) Application for Permit.

Application for a Floodplain Development Permit shall be made on forms supplied by the Zoning Administrator and shall include the following information:

(a) A description of the work to be covered by the permit for which application is to be made.

(b) A description of the land on which the proposed work is to be done, i.e., lot, block, tract, street address, or similar description, that will readily identify and locate the work to be done.

(c) An indication of the use or occupancy for which the proposed work is intended.

(d) The elevation of the 1% Annual Chance flood.

(e) The elevation, in relation to the 1988 North American Vertical Datum, of the lowest floor, including basement of buildings, or of the level to which a building is to be floodproofed.

(f) For buildings being improved or rebuilt, the estimated cost of improvements and the market value of the building prior to the improvements.

(g) Such other information as the Administrator deems reasonably necessary for the purpose of this Ordinance.

(2) Approval

Approval of the Floodplain Development permit must be given prior to any work.

(3) Completion of Work

Upon the completion of the work proposed for a Flood Plain Development permit an as-built plan of the improvements is required to be certified by a licensed engineer that the improvements have been completed according to the permit.

(P) Variance Criteria

The Board of Adjustment may authorize upon request in specific cases such variances from the terms of this Ordinance that will not be contrary to the public interest where, owing to special conditions, a literal enforcement of the provisions of this Ordinance will result in unnecessary hardship. Variances granted must meet Article 19 of the Zoning Ordinance and the following applicable standards.

(1) Variances shall not be issued within any designated floodway if any increase in flood levels during the 1% Annual Chance flood would result. Consideration of the effects of any development on flood levels shall be based upon the assumption that an equal degree of development would be allowed for similarly situated lands.

(2) Variances shall only be granted upon a determination that the variance is the minimum necessary, considering the flood hazard, to afford relief.

(3) In cases where the variance involves a lower level of flood protection for buildings than what is ordinarily required by this Ordinance, the applicant shall be notified in writing over the signature of the Administrator that: (i) the issuance of a variance will result in increased premium rates for flood insurance up to amounts as high as $25 for $100 of insurance coverage and (ii) such construction increases risks to life and property.

(4) All variances granted shall have the concurrence or approval of the Department of Natural Resources.

(5) The Board shall consider such factors as contained in this section and all other relevant sections of this Ordinance.

(a) Factors Upon Which the Decision of the Board of Adjustment Shall be Based. In passing passing upon applications for Variances, the Board shall consider all relevant factors specified in other sections of this Ordinance and:

1) The danger to life and property due to increased flood heights or velocities caused by encroachments.

2) The danger that materials may be swept on to other land or downstream to the injury of others.

3) The proposed water supply and sanitation systems and the ability of these systems to prevent disease, contamination and unsanitary conditions.

4) The susceptibility of the proposed facility and its contents to flood damage and the effect of such damage on the individual owner.

5) The importance of the services provided by the proposed facility to the County.

6) The requirements of the facility for a floodplain location.

7) The availability of alternative locations not subject to flooding for the proposed use.

8) The compatibility of the proposed use with existing development and development anticipated in the foreseeable future.

9) The relationship of the proposed use to the comprehensive plan and floodplain management program for the area.

10) The safety of access to the property in times of flood for ordinary and emergency vehicles.

11) The expected heights, velocity, duration, rate of rise and sediment transport of the floodwater expected at the site.

12) The cost of providing governmental services during and after flood conditions, including maintenance and repair of public utilities (sewer, gas, electrical and water systems), facilities, streets and bridges.

13) Such other factors which are relevant to the purpose of this Ordinance.

(b) Conditions Attached to Variances – Such conditions may include, but not necessary be limited to:

1) Modification of waste disposal and water supply facilities.

2) Limitation of periods of use and operation

3) Imposition of operation controls, sureties, and deed restrictions

4) Requirements for construction of channel modifications, dikes, levees and other protective measures, provided such are approved by the Department of Natural Resources and are deemed the only practical alternative to achieving the purpose of this Ordinance.

5) Flood proofing measures. Flood proofing measures shall be designed consistent with the flood protection elevation for the particular area, flood velocities, durations, rate of rise, hydrostatic and hydrodynamic forces, and other factors associated with the regulatory flood. The Board of Adjustment shall require that the applicant submit a plan or document certified by a registered professional engineer that the floodproofing measures are consistent with the regulatory flood protection elevation and associated flood factors for the particular area.

(Q) Definitions Specific to this Section.

Appurtenant Structure. A structure which is on the same parcel of the property as the principal structure to be insured and the use of which is incidental to the use of the principal structure.

Base Flood. The flood having one (1) percent chance of being equaled or exceeded in any given year. (Also commonly referred to as the “100-year flood”).

Base Flood Elevation (BFE). The elevation floodwaters would reach at a particular site during the occurrence of a base flood event.

Enclosed Area Below Lowest Floor. The floor of the lowest enclosed area in a building when all the following criteria are met:

(a) The enclosed area is designed to flood to equalize hydrostatic pressure during flood events with walls or openings that satisfy the provisions of (Section VII(B)4a) of

this Ordinance, and;

(b) The enclosed area is unfinished (not carpeted, drywalled, etc.) and used solely for low damage potential uses such as building access, parking or storage, and;

(c) Machinery and service facilities (e.g., hot water heater, furnace, electrical service) contained in the enclosed area are located at least one (1) foot above the base flood elevation, and;

(d) The enclosed area is not a "basement" as defined in this section.

Existing Construction. Any structure for which the "start of construction" commenced before the effective date of the first floodplain management regulations adopted by the community.

Flood, 1% Annual Chances. A flood, the magnitude of which has a one percent annual chance of being equaled or exceeded in any given year or which, on the average, will be equaled or exceeded once every 100 years.

Flood, 2% Annual Chance. A flood, the magnitude of which has a two-tenths (0.2) percent chance of being equaled or exceeded in any given year or which, on average, will be equaled or exceeded at least once every five hundred (500) years.

Flood Insurance Rate Map (FIRM). The official map prepared as part of (but published separately from) the Flood Insurance Study which delineates both the flood hazard areas and the risk premium zones applicable to the community.

Flood Insurance Study (FIS). A report published by FEMA for a community issued along with the community's Flood Insurance Rate Map(s). The study contains such background data as the base flood discharge and water surface elevations that were used to prepare the FIRM.

Floodplain. Floodplains are those areas along streams or swales inundated by a 1% Annual Chance storm as designated on the FEMA Flood Insurance Rate Maps.

Floodproofing. Any combination of structural and nonstructural additions, changes or adjustments to structures, including utility and sanitary facilities which would preclude the entry of water. Structural components shall have the capability of resisting hydrostatic and hydrodynamic loads and the effect of buoyancy.

Floodway. The channel of a river or stream and those portions of the floodplain adjoining the channel, which are reasonably required to carry and discharge flood waters or flood flows so that confinement of the flood flows to the floodway area will not cumulatively increase the water surface elevation of the base flood by more than one (1) foot.

Floodway Fringe. Those portions of the Special Flood Hazard Area outside the floodway.

Highest Adjacent Grade. The highest natural elevation of the ground surface prior to construction next to the proposed walls of a structure.

Historic Structure. Any structure that is:

(a) Listed individually in the National Register of Historic Places, maintained by the Department of Interior, or preliminarily determined by the Secretary of the Interior as meeting the requirements for individual listing of the National Register;

(b) Certified or preliminarily determined by the Secretary of Interior as contributing to the historical significance of a registered historic district or a district preliminarily

determined by the Secretary to qualify as a registered historic district;

(c) Individually listed on a state inventory of historic places in states with historic preservation programs which have been approved by the Secretary of Interior or;

(d) Individually listed on a local inventory of historic places in communities with historic preservation programs that have been certified by either i) an approved state program as determined by the Secretary of the Interior or ii) directly by the Secretary of the Interior in states without approved programs.

Lowest Floor. The floor of the lowest enclosed area in a building including the lowest level except when all the following criteria are met:

(a) The enclosed area is designed to flood to equalized hydrostatic pressure during flood events with walls or openings that satisfy the provisions of Section 1 (J) 1 (a) of this Ordinance; and

(b) The enclosed area is unfinished (not carpeted, drywalled, etc.) and is used solely for low damage potential uses such as building access, parking or storage; and

(c) Machinery and service facilities (e.g., hot water heater, furnace, electrical service) contained in the enclosed area are located at least three (3) feet above the 1% Annual Chance flood level; and

(d) The enclosed area does not have its floor or lowest point below ground level on all sides as defined by this Section.

(e) In cases where the lowest enclosed area satisfies criteria a, b, c, and d (above), the lowest floor is the floor of the next highest enclosed area that does not satisfy the criteria above.

Lowest Level. Any enclosed area of a building which has its floor or lowest point below ground level (subgrade) on all sides. (See "Lowest Floor", above.)

Minor Projects. Small development activities (except for filling, grading and excavating) valued at less than $500.

New. Those structures or developments for which the start of construction commenced on or after March 1, 1984.

Recreational Vehicle. A vehicle which is:

(a) Built on a single chassis;

(b) Four hundred (400) square feet or less when measured at the largest horizontal projection;

(c) Designed to be self-propelled or permanently towable by a light duty truck and;

(d) Designed primarily not for use as a permanent dwelling but as a temporary living quarters for recreational, camping, travel or seasonal use

Routine Maintenance of Existing Buildings and Facilities. Repairs necessary to keep a structure in a safe and habitable condition that does not trigger a building permit, provided they are not associated with a general improvement of the structure or repair of a damaged structure. Such repairs include:

(a) Normal maintenance of structures such as re-roofing, replacing roofing tiles and replacing siding;

(b) Exterior or interior painting, papering, tiling, carpeting, cabinets, counter tops and similar

(c) finish work;

(d) Basement sealing;

(e) Repairing or replacing damaged or broken window panes;

(f) Repairing plumbing systems, electrical systems, heating or air conditioning systems and repairing wells or septic systems.

Special Flood Hazard Area (SFHA). The land within a community subject to the “base flood”. This land is identified on the community’s Flood Insurance Rate Map as Zone A, A1-30, AE, AH, AO, AR and/or A99.

Start of Construction. Includes substantial improvement, and means the date the development permit was issued, provided the actual start of construction, repair, reconstruction, rehabilitation, addition, placement, or other improvement, was within 180 days of the permit date. The actual start means either the first placement or permanent construction of a structure on a site, such as pouring of a slab or footings, the installation of pile, the construction of columns, or any work beyond the state of excavation; or the placement of a factory-built home on a foundation. Permanent construction does not include land preparation, such as clearing, grading and filling; nor does it include the installation of streets and/or walkways; nor does it include excavation for a basement, footings, piers, or foundations or the erection of temporary forms; nor does it include the installation of streets and/or walkways; nor does it include excavation for a basement, footings, piers, or foundations or the erection of temporary forms; nor does it include the installation on the property of accessory buildings such as garages or sheds not occupied as dwelling units or not part of the main structure. For a substantial improvement, the actual start of construction means the first alteration of any wall, ceiling, floor or other structural part of the building, whether or not that alteration affects the external dimensions of the building.

Substantial damage. Means damage of any origin sustained by a structure whereby the cost of restoring the structure to its before damaged condition would equal or exceed 50% of the market value of the structure before the damage occurred.

Substantial Improvement. Any improvement to a structure which satisfies either of the following criteria:

(a) "Substantial improvement" means any reconstruction, rehabilitation, addition, or other improvement of a structure, the cost of which equals or exceeds 50% of the market value of the structure before the construction of the improvement. This term includes structures which have incurred "substantial damage" regardless of the actual repair work performed. The term does not, however, include either (1) any project for improvement of a structure to correct existing violations of state or

local health, sanitary, or safety code specifications which have been identified by the local code enforcement officer and which are the minimum necessary to assure safe living conditions or (2) any alteration will not preclude the structure's continued designation as a "historic structure".

(b) Any addition which increases the original floor area of a building by twenty-five (25) percent or more. All additions constructed after March 1, 1984, shall be added to any proposed addition in determining whether the total increase in original floor space would exceed twenty-five percent.

Violation. The failure of a structure or other development to be fully compliant with the County's floodplain management regulations.

Section 2. Streams

(A) Intent and Purpose

The intent of this Section is to establish regulations and procedures that govern all land uses and related development activities adjacent to streams. The streams covered by this Section are identified on Figure 3.2 and 5.1 from the Polk County 2030 Comprehensive Plan. These regulations shall require undisturbed buffers and impervious surface setbacks adjacent to streams.

The purpose of undisturbed buffers and impervious surface setbacks are:

- to protect, restore and maintain the chemical, physical and biological integrity of streams and their water resources;
- to remove pollutants delivered in urban storm water;
- to protect public water supplies;
- to maintain base flow of streams;
- to minimize erosion and control sedimentation;
- to provide infiltration for storm water runoff;
- to minimize impervious surfaces close to streams; and
- to provide riparian wildlife habitats and promote desirable aquatic habitat.

(B) Protection Criteria

(1) Buffer Requirements

(a) Floodway - Mapped streams in all watersheds within unincorporated Polk County with floodway identified on effective FIRM maps shall require a minimum 50-foot undisturbed buffer on each side of the floodway boundary, measured from the edge of the floodway boundary.

(b) No Floodway -Mapped streams in all watersheds within unincorporated Polk County with no floodway identified on the effective FIRM maps shall require a minimum 50-foot undisturbed buffer on each side of the stream's belt width, which is the stream flows measured between the outsides of opposing meander bends. "Iowa Department of Natural Resources (IDNR) Method."

(2) Setback Requirements

(a) Septic tanks and septic tank drain fields are prohibited within the undisturbed buffer area;

(b) An additional 25-foot setback shall be maintained adjacent to the undisturbed buffer in which all impervious surfaces shall be prohibited. Storm water retention or detention facilities are permitted within this setback but prohibited within the stream channel.

(c) Within these watersheds, new hazardous waste treatment or disposal facilities are prohibited.

(C) Applicability

This article shall apply to all land development activity on property containing a stream or near a stream. The Protection areas as defined above shall be met. These requirements are in addition to, and do not replace or supersede, any other applicable buffer requirements established under State Code.

(D) Exemptions

Exemption of these activities does not constitute an exemption for any other activity proposed on a property:

(1) Any existing use that does not change use, zoning district or size is exempt from the requirements but shall meet the requirements for compliance for any new additions, structures or grading on the property.

(2) A perpendicular stream crossing by a driveway, street, or utility lines;

(3) A street or driveway where buffer intrusion is the only option to provide access to a property;

(4) Paved and unpaved trails and paths for public use;

(5) Public water supply intake or public wastewater outfall structures;

(6) Public access facilities that must be on the water including boat ramps, docks, foot trails leading directly to the river, fishing platforms and overlooks;

(7) Utility lines and easements running parallel with the stream, except that all easements (permanent and construction) and clearing and grading shall recognize the sensitivity of the streams and use Best Management Practices to limit and repair the disturbance within the buffer area. This includes such impervious cover as necessary for the operation and maintenance of the utility, including but not limited to manholes, vents and valve structures.

(8) Land development activities within a dedicated street right-of-way existing as of the effective date of this ordinance.

(9) Forestry activities on land that is zoned for forestry or agricultural uses and are not incidental to other land development activity.

(10) Minor land-disturbing activities for the intent of emergency erosion control and bank stabilization activities (i.e. for the purposes of corrective maintenance; measures for health, safety and welfare; post storm; or other disaster relief)

(E) Variance Procedures

No variance shall be granted to the undisturbed buffer and/or setback requirements contained in this section unless a hardship exists and relief, if granted, meets the general purpose and intent of this article. Variance requests shall only be considered if the public or private project with buffer and/or setback intrusion can demonstrate that the completed project will result in maintained and/or improved water quality downstream; and yields no increase in storm water runoff.

(F) Liability

Neither the approval of a plan or issuance of a permit for any regulated activity under the provisions of this ordinance, or compliance with the provisions of this article shall relieve any person from responsibility or liability for:

(1) Any damage to any person, property, tributary or other water body; or

(2) Noncompliance with any other local, State or Federal ordinances, statutes, rules or regulations.

Section 3. Drainageways

Watercourses which are defined either by soil type or by the presence of intermittent or perennial streams or topography which indicates a swale where surface sheet flows join. The following areas are drainageways, which were not identified as streams referenced above**:**

(1) The land, except where areas are designated as floodplain, on either side of and within fifty (50) feet of the centerline of any intermittent or perennial stream shown on the U.S. Geological Service's 7 1/2 minute Quadrangle sheets covering the unincorporated areas of Polk County.

(2) The land, except where areas are designated as floodplain, on either side of and within twenty-five (25) feet of the centerline of any swale identified by topography draining a minimum of five (5) acres of upstream area.

(3) The land included within the following soil classes as mapped in the Polk County Soil Maps provided by the Soil Conservation Service: Alluvial land (Ac), Colo silty clay loam (Cn), Colo silty clay loam, channeled (Co), Colo load, loamy subsoil variant (Cp), Colo-Judson-Nodaway complex (Cr), Colo-Terril complex (Cs), Dorchester silt loam, moderately shallow over sand (Df), Huntsville sandy loam (Hf), channeled (He), Huntsville silt loam (Nb), Riverwash (Ra), Storden-Colo complex (Sk), and the Wabash-Gravity-Nodaway complex (Wc).

(A) Determination

Drainageway areas shall be determined by reference to the following sources in the order indicated below.

(1) USGS Topographic Maps or other topographic maps.

(2) Soil Maps provided in the Polk County Soil Survey.

(3) Orthographic Photos, with field verification.

(B) Design Standards

New developments shall be designed so that there is a continuous strip of open space along the course of the drainageway. Since the purpose of this protection is to preserve the natural storm drainage system, it is logical that drainage improvements and retention or detention structures would be located in these areas. In order to permit this, the open space portions of the drainageway areas may be disturbed, but only if such construction is part of an approved stormwater system that meets the following criteria:

(1) The time of concentration of stormwater flows remains unchanged or is lengthened;

(2) Stormwater storage capacity is unchanged or increased;

(3) Vegetation is installed;

(4) The resultant new drainageway has less velocity than preexisted or reduces stream bank erosion through the provision of erosion control measures;

(5) Additional water is not backed up onto adjoining properties.

Section 4. Woodlands: Mature and Young

Mature Woodlands are an area of mature deciduous trees covering one (1) acre or more and consisting of thirty (30) percent or more largely deciduous canopy trees having a ten (10) inch or greater caliper, or any grove of deciduous trees consisting of eight (8) or more trees having sixteen (16) inch or greater caliper.

Young Woodlands are an area of deciduous or evergreen trees covering one (1) acre or more and consisting of seventy (70) percent or more canopy trees having a three (3.0) inch caliper or greater or a tree plantation for commercial or conservation purposes where seventy (70) percent or more of the canopy trees have a three (3.0) inch or greater caliper.

(A) Determination

The determination of woodland boundaries shall be based on one of the following techniques. If the first source is not applicable or is inaccurate, the second shall be applied.

(1) Official Polk County aerial photographs.

(2) A field survey compiled by a registered surveyor, architect, engineer, landscape architect or forester.

(B) Protection Levels

In all developments, the level of protection provided woodlands shall be in accordance with this Section. Mature woodlands shall be provided with seventy-five (75) percent protection and young woodlands with fifty (50) percent protection except as provided herein under mitigation. On each development, the appropriate level of protection is to be provided by leaving the identified wooded areas undisturbed. In residential developments, such areas must be within the designated open spaces. In nonresidential developments, wooded areas shall be part of the open space and count as part of required landscaping requirements.

(C) Development Pads

When the minimum permitted lot size is 20,000 square feet or more and the presence of young woodlands and/or mature woodlands results in a lowering of the density of the site, a zero may be used for the acreage figure of mature and/or young woodlands in District Performance Standards and corresponding calculations, provided the site plan demonstrates that the desired level of protection is ensured using the provisions of this Section:

(1) All rights-of-way shall be included as part of the development pad. Woodland areas within any rights-of-way shall not be counted as resource protection area.

(2) For each lot, a development pad shall be shown on the final plat. The size of the pad shall be limited by the minimum required level of protection for the resource for the entire parcel. The sum of all development pad and right-of-way areas shall not exceed the total area allowed for development by the minimum resource protection level. A deed restriction shall appear on the plat indicating that no clearing shall be permitted beyond the pad area of the lot.

(3) All drives, septic tanks, tile fields (including reserve tile fields), utility lines,

and buildings shall define the development pad area. The development pad's maximum size shall be determined by the following:

(a) From the Building Foundation. The dimensions of the pad may extend 20 to 40 feet beyond the foundation, depending on the type of concrete application used in construction. If the concrete is pumped in from an outside source or location, the maximum distance to the edge of the pad area shall be twenty (20) feet from the foundation. If the concrete is trucked directly to the site and poured directly from the truck, the maximum distance to the edge of the pad area shall be forty (40) feet from the foundation.

(b) Other Boundaries. For the septic system area, utility lines, and roads, a maximum distance to the edge of the pad shall be five (5) feet from the outermost line or edge of the septic system area, utility line trench, or road pavement. (See the following illustration.)

(4) All grading, fill storage, and ground disturbance shall be strictly confined to the development pad area.

Exhibit 7.1 Development Pad

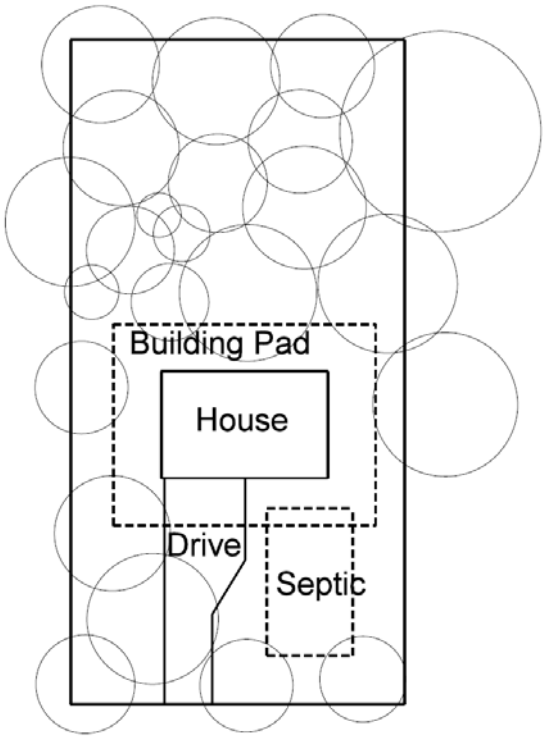

(5) During construction, the areas to be protected shall be fenced or roped off from the development pad area in a secure manner in order to limit the intrusion of construction equipment.

(D) Mitigation

A certain amount of additional disturbance to woodlands may be permitted; but only if the developer mitigates the disturbance according to the following requirements:

(1) The level of protection given woodlands shall not fall below fifty (50) percent for mature woodlands, or twenty-five (25) percent for young woodlands.

(2) The land on which the mitigation is to take place shall be deed restricted as permanent open space with a protective easement running in favor of the County.

(3) Mitigation shall include the planting of one (1) acre of new woodland for every one (1) acre of disturbed woodland for which mitigation is required.

(4) Mitigation shall include the replacement of woodlands that have been disturbed with new woodlands (as specified above) using the following number of plants per acre:

(a) 15 canopy trees, minimum 1.5 inch caliper* and

(b) 60 canopy trees, minimum 5 feet high whip and

(c) 20 under story trees, minimum 5 feet high whip and

*1.5 inch caliper canopy trees may be substituted with 6 foot high evergreen trees.

(5) The species of plants used in mitigation should be similar to those removed. Suggested canopy trees, understory trees, evergreen trees, and shrubs are listed in plant list in Landscaping Requirements Plant Materials Article 10. Division 5 Section 3.

(E) Full Removal

Where it is not possible or practical to plant replacement trees onsite, tree impacts shall be offset by contributing to a mitigation fund used to plant new trees in appropriate locations throughout the county and to provide and utilize these areas as educational resources.

(1) Fee Calculation

(a) The offsite mitigation fee shall be calculated using the value of the required onsite mitigation

(b) This value shall be provided by a licensed Landscape Architect or arborist.

(c) The onsite mitigation value plus an additional 25% shall be provided by the applicant.

(2) Tree mitigation funds

(a) Funds shall be made payable to Polk County Conservation Board

(PCCB).

1) PCCB shall be responsible for planting and maintaining the new tree plantings.

2) PCCC shall also be responsible for educational programs to teach the citizens of Polk County the importance of tree planting and care along with reforestation.

3) PCCB shall expend funds as quickly as possible to provide for the most effective reforestation of woodlands within Polk County.

4) Through electronic communication Polk County Public Works shall inform PCCB the amount of funds to be received and PCCC shall state the location and timeframe of the when the trees will be planted.

(3) Unauthorized tree removal

Unauthorized tree removal is prohibited and shall increase the required mitigation to 200% the value applied to authorized removals.

Section 5. Wetlands

Wetlands are an area of 10,000 square feet or more where standing water is retained periodically and hydric vegetation has adapted to the area. Wetlands include all areas designated as "marsh" or "swamp" or "wetland" on U.S.G.S. maps and all areas designated as containing the following soil types on the Polk County Soil Maps prepared by the Soil Conservation Service: Glencoe (Gc), Muck, very shallow (Mc), Muck, moderately shallow (Md), Okoboji silt loam (Oa), and Peat (Pa).

(A) Determination

Wetland areas shall be determined by reference to the following sources in the order indicated below. If the first source is considered inaccurate or inappropriate, the succeeding techniques may be used:

(1) U.S. Geological Survey Topographic Maps.

(2) Soil Maps provided in the Polk County Soil Survey.

(3) Filed survey of plant material by a botanist, landscape architect or engineer.

(4) Soil borings provided by a registered soil engineer.

(5) US Fish and Wildlife Service National Wetland Inventory.

(B) Protection Level

One-hundred percent (100%) of all wetland areas must remain as open space.

(C) Disruption and/or Modification

All development proposals which will disrupt wetlands shall, in addition to the provisions of this Ordinance, provide proof of approval by the U.S. Corps of Engineers and the Iowa Department of Natural Resources. Mitigation shall be provided on site. Mitigation off site shall only be allowed when it is not possible to mitigate on site and approval is provided by U.S. Corps of Engineers and the Iowa Department of Natural Resources.

Section 6. Native Prairies

Native Prairies are an area of 10,000 square feet or more which is covered by native groundcover, predominated by grasses and forbs, including but not limited to Big Bluestem (Andropogon gerardi), Foxtail Barley (Hordeum jubatum), Gama Grass (Trip sacum dactyloides), Indian Grass (Sorghastrum nutans), Little Bluestem (Andropogon scoparius), Needlegrass (Stipa spartea), Prairie Cordgrass (Spartina pectinata), and Switch Grass (Panicum virgatum), as verified by field inspection conducted by the Zoning Administrator or their assigned agent.

(A) Determination

Native prairie areas shall be determined by reference to the following sources in the order indicated below. If the first source is considered inaccurate or inappropriate, the succeeding may be used:

(1) DNR, Natural Areas Inventory which has records of these two areas:

(a) Dry Sand Prairie T80N, R25W, Sec. 1, SE 1/4 of the NE 1/4.

(b) Wet Prairie T81N, R24W, Sec. 32, NW 1/4 of the SE 1/4.

(c) and any other areas that are recognized by the above survey.

(2) Field verification by registered forester.

(3) Field verification by a recognized expert in prairie restoration.

(B) Protection Level

These areas are very rare remnants of the predominant original vegetation in Polk County. One-hundred (100) percent of these areas shall remain as open space

(C) Mitigation

Where a developer wishes to disturb more prairie than is permitted by this Section, mitigation is required. For the mitigation of prairie destruction, the provisions of this Section shall apply. In no instance shall more than fifteen (15) percent of the native prairie area on a site be disturbed.

(1) Under no circumstances shall the level of protection for prairies be reduced to less than 85 percent.

(2) All mitigation shall require the replacement of prairie that has been disturbed, with a prairie seed mix approved by the Polk County Conservation

(3) All areas subject to disruption requiring mitigation shall be replaced with prairie at a ratio of 1.0 acres of new prairie to every 1.0 acres of disturbed prairie.

(4) The land on which the mitigation is to take place shall be deed restricted as permanent open space with a protective easement running in favor of the County.

(5) A bond in the amount of four thousand dollars ($4,000) per acre shall be posted with the County for each acre (or portion thereof) of land in which prairies are to be preserved and/or replanted. The bond shall be applied to the replacement of any prairie area which should die or fail to establish itself within three (3) years of the completion of construction.

Article 8. Stormwater and Erosion Control Management

Stormwater and the management of stormwater runoff and erosion control are governed by the provisions of the following Sections.

Division 1. Stormwater Runoff

Development of property without disposition of stormwater runoff is prohibited. The owner of any parcel (s) who shall grade, fill, construct on or otherwise alter the existing stormwater runoff rates, velocities, volumes or drainage patterns shall be responsible for damages, inconveniences or distress resulting from such activities.

Section 1. Excess Stormwater Runoff

Excess runoff shall be judged in comparison to the site in its predeveloped condition and shall include all increases in stormwater resulting from any of the following:

(A) An increase in the impervious surface of the site, including all additions of buildings, roads and parking lots.

(B) Changes in soil absorption caused by compaction during development.

(C) Modifications in contours, including the filling or draining of small depression areas, alterations of drainageways, or regrading of slopes.

(D) Destruction of woodlands.

(E) Alteration of drainageways or installation of collection systems to intercept street flows or to replace swales or other drainageways.

(F) Alteration of subsurface flows, including any groundwater dewatering or diversion practices such as certain drains.

Section 2. Limitation of Stormwater Runoff

No development shall cause downstream property owners, watercourses, channels, or conduits to receive stormwater runoff from the proposed development site at a higher peak flow rate, at higher volumes, or at higher velocities than would have resulted from the same storm event occurring over the site of the proposed development with the land in its natural, predeveloped condition, unless sufficient capacity to convey the water through downstream property owners, watercourses, channels or conduits to receive stormwater runoff from the proposed development site is demonstrated.

Section 3. Maintenance of Drainage Easement

Platted or recorded drainage easements shall be maintained by the property owner and shall not be obstructed. An obstruction shall include but not be limited to trees, fences, retaining walls, and structures. Obstructions placed within a drainage easement that cause drainage issues may be removed by Polk County, with proper notice, if it obstructs the flow of water to the extent that immediate damage is to occur to any property.

Crossings provided in drainage easements shall be certified by an Iowa licensed engineer for proper sizing and placement.

Section 4. Runoff and Downspout Controls

Stormwater must be controlled on site and cannot be diverted or backed up onto adjacent property owners. Downspouts shall be diverted onsite to control stormwater and not diverted onto adjacent properties unless said property is provided with a drainage easement. Downspouts shall daylight a minimum of ten (10) feet from a drainage easement or road ditch to allow for infiltration of stormwater.

Section 5. Stormwater Detention Required

Developments not able to directly discharge all flows as indicated in Section 2 above shall provide for detention and design the facility as follows:

(A) If stormwater detention is required, the developer or applicant shall construct stormwater detention facilities designed by a registered professional engineer and meeting the criteria of this division.

(B) Polk County shall determine if construction of stormwater detention facilities are required as a condition for plat approval or issuance of a grading or building permit. Factors to be considered in making such a determination include, but are not limited to:

(1) Preliminary plats, grading sketches, or site sketches submitted by the owner.

(2) Historical or potential localized drainage or flood problems adjacent to the site. This would include previous engineering studies that document flood elevations.

(3) Historical or potential area wide drainage or flooding problems in the watershed.

(4) Location of the site relative to existing drainageways and/or stormwater conveyances.

(5) Extent of proposed site increase in impervious surface area.

(6) Anticipated future development of the drainage basin.

(7) Existing site features which may facilitate or impede detention design and/or construction.

(C) Polk County shall have no obligation to review, check, or otherwise verify the certified engineering calculations, method of design, or stormwater detention facility plans and as-built drawings required to be submitted. Acceptance of stormwater detention plans, calculations or as-built drawings and issuance or approval of any permit or plat shall be interpreted as satisfying the requiring that such plans, calculations and documents be submitted to Polk County. In no instance shall such permit issuance, plat approval or acceptance of such documents by Polk County be construed as approval of the Engineer's design methods, design calculations, detention facilities plan, as-built drawings, approval of detention construction, or concurrence by Polk County that all design criteria have been satisfied. The Engineer and developer shall be fully responsible for the design, construction, and damages resulting from concentrated discharge of stormwater detention facilities.

Section 6. Design Criteria

(A) Minimum design storm is a rainfall event having a return frequency of 100 years.

(B) Design storm duration is that critical duration of rainfall requiring the greatest detention volume.

(C) After development, the release rate of runoff for rainfall events having an expected return frequency of one (1) year to five (5) years shall not exceed the existing, predeveloped peak runoff rate from those storms.

(D) Method of analysis: see Precipitation Models and runoff models as detailed in SUDAS – current edition.

Example #1

(a) A ten (10) acre site has a critical storm duration of six (6) hours after development.

(b) The peak rate of runoff generated from the site by a one (1) year, six (6) hour storm before development is 2 cfs.

(c) Discharge from detention during the one (1) year, six (6) hour storm after development shall not exceed 2 cfs.

(E) For rainfall events having an expected return frequency of five (5) years to 100 years, inclusive, the rate of runoff from the developed site shall never exceed the existing, predeveloped peak runoff from a five-year frequency storm of the same duration.

Example #2

(a) The ten (10) acre site in Example #1 has a peak rate of runoff from a five (5) year, six (6) hour storm before development of 2.7 cfs.

(b) Discharge from detention during the 100-year, 50-year or 25-year, six (6) hour storm after development shall not exceed 2.7 cfs.

(F) Detention of runoff generated by upstream land is not required. Release of runoff generated off-site shall not, however, be made in such a manner as to increase the allowable detention basin release rates as stated in paragraphs D and E of this section.

(G) Release of stormwater runoff from the detention basins shall be made in such a manner as not to damage or devalue private or public properties.

(H) Road ditches and road right-of-ways will not be utilized as detention basins.

(I) A copy of the design engineer's calculations for the stormwater detention shall include:

(1) Watershed area; describe overall watershed area and subareas on a drainage map.

(2) Inflow hydrographs; stage-storage, stage-discharge, and routing curves; and such other routing computations which are the basis of the design.

(3) Calculations of allowable discharge, required storage volumes and calculated

ponding elevations.

(4) Such other calculations and materials required to complete the design.

(J) Certification by a registered engineer that the stormwater detention facilities design and calculations were performed by them, or under their supervision, and that the facilities and design meet the criteria of this Division.

Section 7. Design Regulations

All detention facilities and improvements required by this Section shall comply with the following regulations.

(A) Outlet Control Structures. Outlet control structures shall be designed as simply as possible and shall operate automatically. They shall be designed to limit discharges into existing or planned downstream channels or conduits so as not to exceed the flow from the site in its predeveloped condition.

(B) Dry Bottom Basin. For basins designed without permanent pools:

(1) Interior Drainage. Provisions must be made to facilitate interior drainage, to include the provision of natural grades to outlet structures, longitudinal and transverse grades to perimeter drainage facilities or the installation of subsurface drains, so as to provide positive drainage of the basin.

(2) Multipurpose Features. Dry bottom basins may be designed to serve secondary purposes for recreation, open space, or other types of use which will not be adversely affected by occasional or intermittent flooding.

(3) Cleaning. The basins shall be designed to allow periodic cleaning and removal of sediments, which shall be removed from the site or otherwise disposed of in an appropriate manner.

(C) Wet Basins. For basins designed with permanent pools:

(1) Depth for Fish. If fish are used to help keep the basin clean, at least one-quarter (.25) of the area of the permanent pool must have a minimum depth of ten (10) feet.

(2) Facilities for Emptying. For emergency purposes, cleaning, or shoreline maintenance facilities shall be provided, or plans prepared for the use of auxiliary equipment, to permit emptying and drainage.

(3) Pollution Abatement. Aeration facilities may be required when the quality of the influent and detention time would result in a lowering of dissolved oxygen content in the basin.

(4) Slopes. Approach slopes shall be at least 6:1 and shall be at least ten (10) feet wide and slope gently toward the basin. The side slopes shall be of non-erosive material with a slope of 4:1 or flatter. The ledge shall be ten (10) feet wide and slope gently toward the shore to prevent people or objects from sliding into deep water. There shall be a freeboard of twelve (12) to eighteen (18) inches above the high-water elevation on all retention basins. Alternate designs for side slopes may be considered under special circumstances where good engineering practice is demonstrated. See exhibit 8.1 Wet basin design.

Exhibit 8.1 Wet basin design

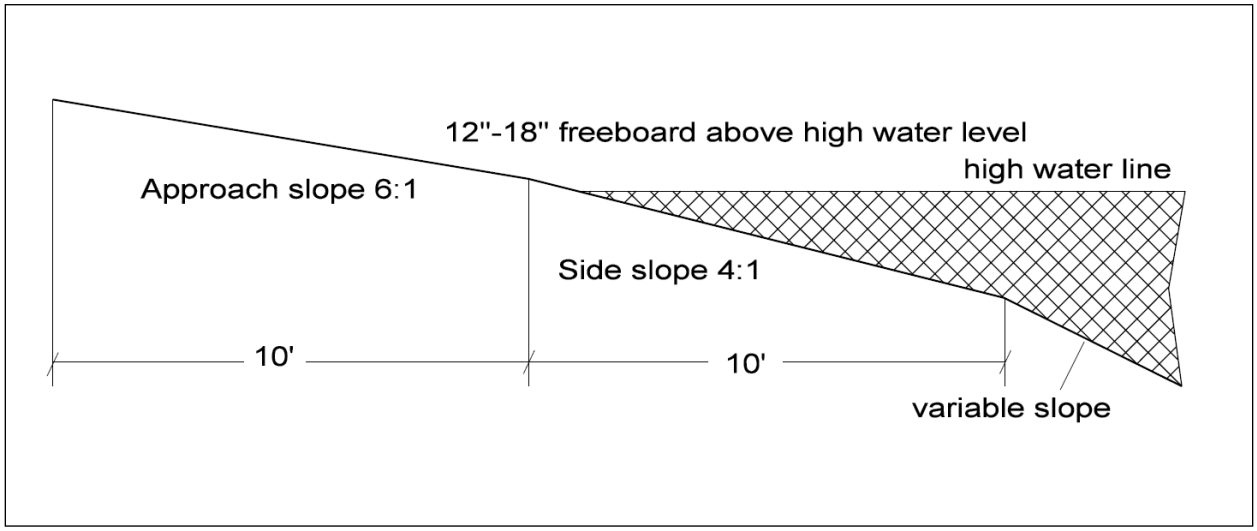

(5) Cleaning. The basins shall be designed to include sediment traps in all inlets. Sediment traps shall be designed to permit periodic cleaning and maintenance. A basin maintenance plan shall be developed to ensure that the design depths of the basin will remain over time.

(D) Building Regulations

(1) Roof-Top Storage. Detention storage requirements may be met either in total or in part by detention on flat roofs. Design specifications of such detention shall be a part of the site plan review process. These specifications shall include the depth and volume of storage, design of outlet devices and down drains, elevations of overflow scuppers, design loadings for the roof structure, and emergency overflow provisions. Rooftop storage shall not be permitted to drain directly into sanitary sewers or streets.

(2) Parking Lot Storage. Paved parking lots may be designed to provide temporary detention storage of stormwater on a portion of their surfaces not to exceed fifty (50) percent. Outlets shall be designed to empty the stored waters slowly, and depths of storage must be limited so as to prevent damage to parked vehicles. Storage areas shall be posted with warning signs and shall be designed to fill to maximum depth in not less than two (2) hours.

(3) Underground Storage. All or a portion of the detention storage may also be provided in structurally adequate underground detention facilities. Design must account for high water table conditions.

(E) Stormwater Storage shall be permitted in the floodway fringe. Stormwater Storage shall not be permitted in the floodway.

Section 8. Maintenance of Facilities

The owner of the property shall be responsible for the maintenance of all stormwater detention facilities. For cluster and planned developments, the developer shall be responsible for the maintenance of all improvements until such time as eighty (80) percent of the development is completed or until such time as eighty (80) percent of the lots in the development have been sold or rented. The transfer of these improvements for the purpose of maintenance by the homeowners shall not be effected until the developer has received final approval, final inspection, and a certificate of compliance from the County. Thereafter, any retention and detention improvements shall be maintained in perpetuity and cannot be developed for any other use which would limit or cause to limit their use for detention. Detention facilities maintenance shall be placed as a deed restriction to guarantee the proper maintenance and function of detention basins.

Section 9. Inspection of Facilities

The developer's engineer shall be required to inspect all drainage facilities under construction. Prior to occupying the building or premises, if the Zoning Administrator determines a need, the owner shall submit as-built drawings of the stormwater detention facilities to Polk County. Drawings must bear the certification of a registered professional engineer stating the detention facilities will perform in accordance with the previously submitted design plans and computations. In addition, a registered engineer, employed by the County, may inspect all drainage facilities while under construction. When facilities are not constructed according to approved plans, the County has the explicit authority to compel compliance and require correction of any situations which are not according to the approved plans.

Division 2. Erosion and Sediment Control

Section 1. General

Soil erosion contributes to the impairment of drainageways, increases road and storm sewer and open ditch maintenance costs, contributes to the destruction and obstruction to traveled roadways creating a potential hazard for vehicular traffic, and contributes to contamination and degradation of land surfaces and streams, flooding and dusty conditions. This chapter establishes requirements for grading, filling, fill material, and for obtaining Grading Permits in an effort to control erosion and sediment transport and to prevent pollution. These standards include the use of suitable fill material, stable slope construction, proper site drainage, pollution prevention and usability of public and private easements.

Section 2. Applicability

No person shall engage in land-disturbing activities that include fill in excess of three (3) feet, excavation exceeding five (5) feet or any grading or clearing activity that disturbs an area of five thousand (5,000) square feet within the unincorporated parts of Polk County unless they have received a Grading Permit. In addition, through the Iowa DNR, owners of certain construction sites are required to obtain permit coverage under rules contained in National Pollutant Discharge Elimination System General Permit No. 2, Storm Water Discharge Associated with Industrial Activity for Construction Activities ("General Permit No. 2").

Section 3. Additional Standards

(A) General Permit No. 2 and the document entitled Iowa Construction Site Erosion Control Manual, issued and administered by the Iowa DNR, are hereby adopted and by reference made part of this Section as if fully set forth herein. Any act these documents require or prohibit, is required or prohibited by this Chapter. Any future amendments, revisions, or modifications to these documents, incorporated herein, are intended to be made a part of this Section.

(B) In new subdivisions at time of roadway and/or utility acceptance all erosion control measures shall be in place according to SWPPP and maintained as part of the Erosion Control Bond.

(C) Any construction that will disturb the soil requires erosion control protection measures shall be in place. This includes perimeter protection of disturbed construction area and gravel entrance drive a minimum of 25 feet from public roadway. An exception to this requirement may be granted by the Zoning Administrator if existing ground cover or entrance conditions do not warrant protection. Additional protection measures may be required, if existing measures are not providing enough protection as determined by the Zoning Administrator or designee.

Section 4. Grading Permit Required

Any property or development sites that engages in land-disturbing activities; including fill in excess of three (3) feet, excavation exceeding five (5) feet or any grading or clearing activity that disturbs an area of five thousand (5,000) square feet within the unincorporated parts shall obtain a Grading Permit prior to any land-disturbing activities.

All Grading Permits shall be issued by Polk County Public Works upon approval of a completed Application for Grading Permit on a form provided by the County. The application shall be signed by the title holder of the site, together with the applicant, if different from the title holder.

Properties required to obtain Grading Permit shall comply with requirements for Sites Covered by the Iowa DNR NPDES General Permit No. 2, herein as required.

Grading Permits shall be valid for a period of one year from the date of issuance and must be renewed by resubmitting applicable information and fee.

A Grading Permit Application shall include the following:

(A) A completed Application for Grading Permit on a form provided by the County

(B) A Grading Plan prepared by a licensed Engineer, unless deemed unnecessary by Zoning Administrator

(C) A SWPPP conforming to:

(1) the requirements of this chapter, and the requirements of NPDES General Permit No. 2

(2) If a SWPPP for the site has previously been submitted to the County and has not been modified, the applicant shall submit a signed and dated statement that the SWPPP has not been modified, in which case the SWPPP need not be resubmitted.

(D) Payment of the permit fee.

(E) The permittee shall provide all material submitted as part of a Notice of Discontinuation when such a notice is filed with the Iowa DNR.

Section 5. Other Permits Required and Exceptions

(A) Other Permits Required.

(1) Filling or construction within floodplain limits as established by the Federal Emergency Management Agency regulated in the Polk County Zoning Ordinance will require a separate additional permit under this ordinance, in addition to the permits required by this chapter.

(2) For work that is specifically covered by a County Demolition Permit, Building Permit, or approved plan of improvements containing a NPDES Permit SWPPP, a Grading Permit is not required. However, site filling and grading done pursuant to these approved permits and plans shall meet the requirements of this chapter.

Section 6. Exemptions

The following activities are exempt from the permit requirements of this chapter:

(A) Crop production activities;

(B) Cemetery graves;

(C) Emergencies posing an immediate danger to life or property, or substantial flood or fire hazards;

(D) Public improvements.

Section 7. Additional Requirements

(A) Filling Requirements

(1) Clearing and grubbing shall be performed according to Statewide Urban Design Standards

(2) Fill material shall be placed according to the SWPPP.

(3) Interim filling during construction shall be placed in a safe manner. Slope stabilization, inspection and maintenance of erosion control, and soil stabilization where work has been suspended shall be according to SUDAS.

(4) Finish grading shall be according to plan.

(B) Unacceptable Fill Materials.

Fill materials shall not include hazardous waste, synthetic material, metal, and organic material other than natural topsoil incidental to excavation except as noted below.

(1) Concrete, brick, tile, and other manufactured inert material shall not be greater than 18” in its greatest dimension.

(2) or where the final location will be below the known water table.

(C) Tree Removal

(1) Trees may not be buried.

(2) Trees may be burned with a Burning Permit approved by the Air Quality Division of Polk County Public Works on the site they originate from, provided separation requirements from nearby dwelling units can be met and proper notification is completed. Trees shall not be brought onsite for burning.

(D) Concrete Waste Management for any concrete activity

(1) Washout facilities prevent runoff of concrete wash water which is alkaline and contains high levels of chromium and can increase the pH of area waters.

(a) Concrete washout waste must be contained in washout areas. The washout areas shall contain the concrete and liquids when the chutes of concrete mixers and hoppers of concrete pumps are rinsed out after delivery.

(b) Saw-cut slurry must be vacuumed or shoveled and removed from the site or disposed of in a concrete washout area.

(2) Washout areas consolidate solids for easier disposal. These washout areas must be removed and/or cleaned, and dry waste concrete must be disposed of properly.

Section 8. Stormwater Pollution Prevention Plan (SWPPP) Required.

Sites with a disturbed area greater than or equal to one acre shall require an acceptable SWPPP meeting the requirements of this chapter, certified by a design professional.

(A) SWPPP Requirements

Every SWPPP submitted with a grading permit application shall meet the following:

(1) Contain complete 24-hour contact information for the site owner and the person responsible for providing and maintaining sedimentation and erosion control for the site. The permittee shall inform the Public Works Department of any change in this contact information.

(2) Comply with all current minimum mandatory requirements for SWPPPs promulgated by the Iowa DNR in connection with NPDES General Permit No. 2, including those published as Summary Guidance for General Permit No. 2 by the Iowa DNR.

(3) Comply with all other applicable state or federal permit requirements in existence at the time of application.

(4) Include a drainage plan accompanied by a drainage report. The drainage report shall at a minimum demonstrate the design of proposed grading, erosion, and sediment control if constructed per plan is not expected to adversely impact adjacent properties.

(5) Be prepared by a design professional; and

(6) Include within the SWPPP a signed and dated certification by the person preparing the SWPPP that the SWPPP complies with all necessary requirements.

(7) The SWPPP shall only be modified by a design professional as required in NPDES General Permit No. 2.

Section 9. NPDES General Permit No. 2 Required.

The County shall not allow any land-disturbing activity on a site for which coverage under General Permit No. 2 is required, nor shall the County issue any permit, authorization, or license allowing such activity, until the site owner has obtained coverage for the site under General Permit No. 2 from the Iowa DNR.

(A) Any responsible party who is required to obtain, or has obtained, coverage under General Permit No. 2 shall comply with all the requirements of General Permit No. 2. Failure to do so is a violation of this Section.

(B) Completion of work shown in a Stormwater Pollution Prevention Plan submitted under the provisions of General Permit No. 2 is a requirement of General Permit No. 2 and failure to complete such work is a violation of this Section.

(C) For sites covered under General Permit No. 2 where the ownership changes, the County must be notified of the title transfer within 30 days, except in the case of single-lot sales, a copy of the notice of transfer shall be included in the SWPPP. For sites that are part of a larger common plan of development such as a housing or commercial development project, if a permittee transfers ownership of all or any part of property subject to a Grading Permit, both the permittee and transferee shall be responsible for compliance with the provisions of General Permit No. 2 and the Grading Permit for that portion of the project which as been transferred.

Section 10. Inspection, Notice to Comply and Notice of Violation

(A) Inspections.

The County may inspect the site in response to reports from third parties or at other times, at the County's discretion.

(1) Right of Entry. The Zoning Administrator and authorized employees of the county shall be permitted to enter all properties for the purposes of inspection, observation, measurement, sampling, and testing in accordance with the provisions of this chapter. The applicant, owner, or titleholder shall be deemed to have consented to such entry by submission of an application for any permit or plan identified in this chapter. Barring or delaying such inspection is a violation of this section.

(2) The Zoning Administrator or designee shall have access to and be able to copy any records that must be kept under the conditions of General Permit No. 2 within three business hours, where a business hour is any hour between 7:00 AM and 5:00 PM on a non-holiday weekday.

(B) Notice to Comply.

The County may issue a Notice to comply with the responsible party or parties, describing any problems and specifying a date and time by which compliance must be achieved. Failure to achieve compliance by the specified date and time is a violation of this Section.

(C) Notice of Violation.

The Zoning Administrator shall, upon determination of any violation of this Section, issue a Notice of Violation in writing to the responsible party or parties, indicating the nature of the violation and ordering the action necessary to correct it.

(1) The Notice of Violation may:

(a) Order the discontinuance of any illegal work, specifying a date and time for such discontinuance; and

(b) Require the repair and cleanup of any damage done due to failure to comply with General Permit No. 2, specifying a date and time for completion of repair and cleanup; and

(c) Order the withholding of any building or occupancy permits for the site; and

(d) Order the discontinuance of any or all work at the site, including at the Administrators discretion work not directly related to the cause and prevention of erosion and sedimentation, except work necessary to achieve compliance and to repair and clean up damage, specifying a date and time for such discontinuance to commence and conditions for such discontinuance to cease.

(2) Failure to comply with any order in a Notice of Violation is an additional violation. Each day of such failure constitutes a separate violation.

(3) The Administrator may modify a Notice of Violation and may authorize, in writing, an extension to the specified dates and times therein.

(4) The Notice of Violation shall, where necessary or appropriate, recommend to the County Attorney the institution of legal or equitable actions that may be required for the enforcement of this Section.

(5) Communication to a responsible party's employee, partner, attorney, agent, contractor, or subcontractor shall be regarded as communication to the responsible party for the purpose of this section.

(6) Communication to one responsible party shall be regarded as communication to each responsible party for the purpose of this section.

Section 11. Repair and Clean-Up of Damage.

For any site, whether or not covered by a Grading Permit or other stormwater discharge permit, the County may clean up eroded sediment or tracked soil deposited on public property if:

(A) Corrective action has not been completed within 24 hours

(B) In the judgment of the Public Works Department, damage to the environment is ongoing and prompt corrective action would be intended to reduce such damage.

(C) If the County cleans up such material deposited off site, the Public Works Department will invoice the responsible party or parties for the County's actual costs including overhead, which may be recorded as an assessment against the property and constitute a lien thereon.

(D) Failure to pay an invoice under this Article within 30 days shall constitute a violation of this Ordinance.

Section 12. Enforcement

The County shall revoke the Grading Permit or decline renewal if unacceptable materials are being deposited at the site, or if the permittee has failed to comply with any of the regulations set forth in this chapter, or any requirement of law, statute or regulation.

(A) Violation of any provision of this ordinance may be enforced by civil action including an action for injunctive relief.

(B) In any civil enforcement action, administrative or judicial, the County shall be entitled to recover its attorneys' fees and costs from a person who is determined by a court of competent jurisdiction to have violated this ordinance.

Section 13. Fees.

The Board of Supervisors may establish and modify fees by resolution for permit applications, permit renewal applications. A submittal shall not be considered unless the appropriate fee has been submitted with all appropriate documentation.

Article 9. Conservation Design

Division 1. Purpose

To provide a development option that supports sustainable development to protect water quality, manage on-site storm water, preserve agricultural land, preserve natural resources, and promote open space. Conservation Design encourages reduction of impervious surfaces in site development and subdivisions through promotion of clustering of buildings and units and efficient road design and parking area design. Recreation activities and linkages are also encouraged through the creation of trails and their connection to adjoining trails and linkages between open spaces, city and county parks by tying into regional trails existing and proposed in residential and non-residential development.

Division 2. Low Impact Development

Low Impact Development measures help manage on-site stormwater flows, reduce soil erosion, and prevent stormwater pollution. Options include use of native grasses and plants in buffer/filter strips, establishing native prairies, and implementing bioswales, bioretention cells, and rain gardens as stormwater collection options.

Permeable paving may be used in specific areas of a development if approved by Polk County at time of site development or preliminary plat.

Division 3. Development Considerations

Section 1. Residential Development Options

Conservation Development must be done as a Cluster or Planned Development Option.

Section 2. Clustering

All lots, residences, and accessory buildings and non-residential buildings shall be located to minimize negative impacts to natural resources. Streets, driveways and other impervious surfaces shall be limited to promote reduction of stormwater pollution and protection and preserve natural resources and open spaces.

Section 3. Density Bonus

Density bonuses may be provided by the County for developments meeting purpose and intent of this conservation ordinance and when additional on-site storm water management measures and practices are incorporated into the development. The additional units should not change the character of the proposed development or adjacent developments.

(A) To obtain a density bonus, the developer's engineer must demonstrate that the additional on-site storm water management measures, including but not limited to retention areas, detention areas, buffer/filter strips, bioswales, bioretention cells, and native grasses will reduce storm water flows generated from all proposed structures including all proposed graded and fill areas by 50% or greater. Calculations must show storm water runoff rates of development with the new storm water management measures and without them.

(1) Density bonuses are awarded if the previous standard can be met as follows: A five (5) percent increase in the number of units with a minimum development of twenty (20) units. The bonus is rounded down to nearest whole unit. The bonus will be provided in addition to the Density calculations as determined form the Density Calculations Worksheet.

Section 4. Open Space

(A) All open space within development shall be restricted from future development and connected where possible.

(B) All open space shall be owned by a homeowners association or other entity approved by County.

(C) Permitted activities in open space may include but is not limited to: passive and active recreation, hiking, walking, running, biking, play fields, community gardens, normal uses of ponds and other water features. Common accessory buildings, shelters, and related structures may be located in open space where intended use is consistent with intent and purpose of conservation subdivision.

(D) Trails and pathways shall be designed so as to limit fragmentation and disruption of natural resources. Trails and pathways when ever possible shall be linked with other adjacent trails and pathways. Minimum trail width shall not be less than six (6) feet.

(E) Buffer strips or zones shall be encouraged in the open space along perimeter of a development to provide screening between adjacent uses. The planting of trees, shrubs and natural grasses are encouraged within buffer areas and street particularly in developments where woods and other screening natural resources are limited or non-existent. Minimum width of buffer strip shall be 50 feet.

(F) Septic Systems

(1) Where sanitary sewer is not located within 300 feet of any proposed conservation development, on-site septic systems for each property may be permitted.

(2) Septic systems may be located within common open space areas if approved by the County. Approved septic systems located within common open space shall include an easement shown on the plat extending to include an area for a replacement system.

Section 5. Ownership and Maintenance of Open Space and Related Structures

(A) The documents of the Homeowners Association must be reviewed and approved by the Polk County Public Works and the County Attorney's Office.

(B) Open space areas and related structures shall be owned by a homeowners association and other entities approved by the County. Participation in the homeowners association or non-residential development is mandatory for all property owners.

(C) A maintenance plan shall also be submitted for review and approval by the County during subdivision review process and recorded with the plat. The maintenance plan should identify the existing status and condition of natural resources within open space, measures needed to restore, correct or improve natural resources within the open space and the proposed end results of maintenance, restoration, corrections or improvements to natural resources within the open space areas.

Article 10. Landscaping

Division 1. Purpose

The Landscaping requirements are designed to enhance the attractiveness of the county and improve the quality of life by protecting residential developments from surrounding uses, soften harsh expanses of pavement, and screen undesirable views.

The bufferyards are intended to function in a manner to minimize potential nuisances such as dirt, litter, noise, glare of lights, signs, and unsightly buildings or parking areas, or to provide spacing to reduce adverse impacts.

Division 2. Landscaping Area Requirements

Landscaping including the options of plant materials (Overstory Trees, Understory Trees, Evergreens, Shrubs) are required in parking areas of development sites. Plant materials, earthen berms and fences are Landscaping options as a buffer between certain specified uses, between zoning districts and along streets.

Section 1. Landscaping Determination

Each development site is divided into areas, if applicable, for parking lot, open space area, peripheral bufferyard and street bufferyard landscaping. The area of each must be measured and determined if required and the amount of landscaping required.

(A) Parking Lot Landscaping

Each multi-family residential and nonresidential parking lot shall contain a minimum amount of landscaping and islands within the parking lots and adjoining entrance drives and circulation drives.

(B) Peripheral Bufferyard Landscaping

Peripheral bufferyards shall be required to separate different zoning districts and different development options within the same district. Bufferyards shall be located along the outer perimeter of a lot or parcel, and shall extend to the lot or parcel boundary line. A bufferyard is a combination of a setback and a visual buffer or barrier, and is a yard or area together with the planting and/or structure. Both the amount of land and the type and amount of planting specified are designed to limit nuisances between certain adjacent land uses within the same zoning district, or between different zoning districts.

(C) Street Bufferyard Landscaping

Street bufferyards shall be required for all non-residential developments in all districts. Street bufferyards are designed to ensure a desired character along public streets.

Section 2. Standard Plant Units

This Section defines the standard plant unit options. All landscaping shall conform to the plant unit options of this Section.

(A) All landscaping requirements, except reforestation requirements, are stated in terms of the number of standard plant units required.

(B) The following illustration specifies the plant unit options. In general, the three (3) plant mixes are interchangeable; however, alternative 3 is best suited for the interior of parking lots and, in other cases, where a year-round screen is required, alternative 2 is preferred and may even be specified by the County.

(C) Each plant unit option is shown with an "A" and "B" alternatives. The "A" options are required for Peripheral bufferyards and Street bufferyards. The "B" options are required for parking lot landscaping and open space landscaping

Figure 10.1 Standard Landscaping Plant Units

					Alternatives	
					"A" Bufferyards Peripheral Street	"B" Lot Landscape Parking Lots Open Space
Plant Option	Quantity Required*	Points per plant	Total Points	Plant Type	Sizes Installed	Sizes Installed
#1	1	1	1.00	Canopy	1 ½" caliper	5' high
	2	.5	1.00	Understory	1 ¼" caliper	5' high
	7	.15	1.05	Shrubs	2' high	11" high
#2	3	.5	1.50	Evergreen	6' high	2' high
	10	.15	1.50	Shrubs	2' high	11" high
#3	2	1	2.00	Canopy	1 ½" caliper	5' high
	7	.15	1.05	Shrubs	2' high	11" high

(D) Substitutions for Standard Plant Units

For Alternatives "A" and "B" substitutions shall use the following values:
Canopy trees equal 1.0, evergreen and understory trees equal 0.5 and shrubs equal 0.15. Any substitution can take place to mix and match plant types. The substitution shall not reduce the number of shrubs to less than 50% of the required quantity prior to the substitution.

Substitution Example: A proposed development has 280 feet of frontage with a 20 foot development setback requiring 1.4 plant units (according to Table 10.4) per 100 feet of frontage which equals (2.8 X 1.4) 3.92 required plant units of "A" Alternative Landscaping Plant Units. Under Plant Option #1 the development would be required 4 canopy trees, 8 understory and 28 shrubs. Using the substitutions, the proposed development needs 11.76 points (3.92 plant units times 3) so the development could use 6 canopy trees (1.0 X 6 = 6 points) 3 understory trees (0.5 X 3 = 1.5 point), 5 evergreens (0.5 X 5 = 2.5 points), and 14 shrubs (.15 X 14 = 2.10 points) Total = 6+1.5+2.5+2.10 = 12.10 points.

Division 3. Landscaping Calculations

The following sections provide an explanation on how to calculate the required landscaping for each requirement.

Section 1. Parking Lot Landscaping Calculations

One (1) "B" alternative plant units shall be planted and three hundred twenty-four (324) SF of landscaping island(s) shown per twelve (12) parking spaces. Uses within rural district not required to pave parking areas are also not required to provide any landscaping within unpaved parking areas. Uses with less than twelve (12) spaces, no parking lot landscaping or islands required. For every six (6) spaces over twelve (12), .5 plant units and one hundred sixty-two (162) SF of landscape island is required. Parking lot landscaping not required for parking stalls located at fuel pumps. The following figure shows an example parking lot landscaping.

Figure 10.2 Parking Lot Landscaping

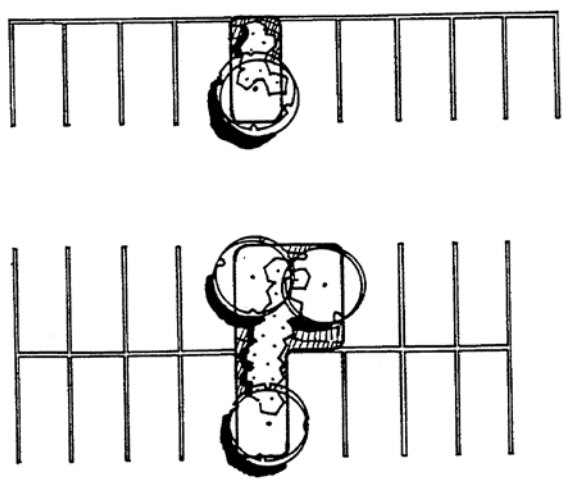

Section 2. Peripheral Bufferyard Calculations

Peripheral bufferyard standards are based on a required opacity value (Light, Moderate, or Heavy). A variety of combinations of bufferyard width, planting intensity, and structural options (such as fences or berms) may be selected to reach the required opacity value. To determine the peripheral bufferyard required on a parcel or between two parcels identify whether any portion or property line of the site constitutes either a zoning district boundary or a boundary between development options located within the same zoning district. If this condition does not exist a peripheral bufferyard is not required. If it does, determine the zoning district and the development option on both sides of the property line.

(A) Calculation of Bufferyard Requirements

Use Table 10.3 to determine the level of opacity (Light, Moderate or Heavy) required for the peripheral bufferyard for each property line (or segment thereof) of the subject parcel.

(B) If a fence is used, the 6' buffer fence shall be a wood board on board fence or similar. Each fence must be made of new materials that are constructed to provide a solid screen. Structural support for fencing shall be placed facing the property interior. Materials other than wood may be used for the solid screen fence with the approval of the Zoning Administrator, if the material and construction method provides an equivalent performance; chain link fence with slats is not permitted.

(C) Calculate the required number and types of plants.

(1) Use Table 10.4 to select the combination of bufferyard width, intensity of vegetation, and/or structure to be used to reach the required level of opacity listed in Table 10.3. Note the required number of plant units from the option selected. Bufferyard standards listed in Table 10.4 are for every one hundred (100) lineal feet of peripheral lot line boundary present on a given lot.

(2) In instances where the zoning district boundary does not equal one hundred (100) feet, the required bufferyard planting shall be based on the percentage of one hundred (100) feet that is present along district boundaries and/or street frontage.

(3) Select one of the three standard "A" option plant unit alternatives from Figure 10.1.

(4) Multiply the number of required "A" option plant units selected from Table 10.4 by the number of required plant types per one hundred (100) feet listed for the selected plant unit option from Figure 10.1. These numbers represent the required number of trees and shrubs per one hundred (100) feet for the bufferyard option selected.

(5) Divide the length of the required bufferyard by one hundred (100) feet to determine the bufferyard length multiplier.

(6) Multiply the bufferyard length multiplier by the number of required trees and shrubs per one hundred (100) feet calculated in Step c, above. These numbers represent the total required plant materials for the selected bufferyard option.

(7) Use Plant List Table 10.5 to select the species of trees and shrubs to be placed in the bufferyard.

(8) Establish whether the land on the adjoining property is vacant or developed, then determine the responsibility of installation of required peripheral bufferyards, as presented in Division 4 of this Article.

Section 3. Street Bufferyard Calculations

Street bufferyard landscaping is required to provide a variety of combinations of plantings along the frontage of nonresidential and planned residential development.

(A) All nonresidential and planned residential development options require a "Light"

street buffer.

(1) Use Table 10.4 to identify the required number of "A" alternative plant units for each one hundred (100) lineal feet of street buffer.

(2) In instances where the street frontage does not equal one hundred (100) feet, the required bufferyard planting shall be based on the percentage of one hundred (100) feet that is present along district boundaries and/or street frontage.

(B) Calculate the required number and types of plants.

(1) Select one of the three standard "A" alternative plant unit options from Figure 10.1.

(2) Multiply the number of required "A" alternative plant units selected from 9.4 by the number of required plant types per one hundred (100) feet listed for the selected plant unit option from Figure 10.1. These numbers represent the required number of trees and shrubs per one hundred (100) feet for the bufferyard option selected.

(3) Divide the linear street frontage of the site (as measured at the right-of-way line) by one hundred (100) feet to determine the bufferyard length multiplier.

(4) Multiply the bufferyard length multiplier by the number of required trees and shrubs per one hundred (100) feet calculated in Step b, above. These numbers represent the total required plant materials for the selected street bufferyard option.

(C) Use plant list Table 10.5 to select the species of trees and shrubs to be placed in the street bufferyard.

(D) Fences are not recommended for street bufferyards.

Landscaping Calculations Worksheet 10.1

Project Name	
Address	

A. Parking Lot Landscaping

1 - "B" Alternative plant unit (see figure 10.1) and 324 sf of island per 12 parking spaces, for every six (6) spaces over twelve (12), .5 plant units and 162 sq. ft. of island is required.

Number of Parking Spaces	
Number of "B" Plant units	
Area of Parking lot islands	

B. Peripheral Bufferyard Landscaping

Peripheral bufferyard are required if any portion of a property line of the site is adjacent to either a different zoning district or development options.

Peripheral Bufferyard needed		**(refer to Table 10.3)**	
North	Y / N	Opacity required	
South	Y / N	Opacity required	
East	Y / N	Opacity required	
West	Y / N	Opacity required	

Lineal feet of subject property adjacent to different Zoning		**Bufferyard setback (distance to property line)**	
North		North	
South		South	
East		East	
West		West	

Plant Units Required/100 feet (see Table 10.4)		**"A" Plant Units Required**	
North		North	
South		South	
East		East	
West		West	

C. Street Bufferyard Landscaping

Street Bufferyard Landscaping requires a Light buffer (refer to Table 10.4)

Lineal feet of property adjacent to street	
Bufferyard setback (distance to property line)	
Plant Units Required/100 feet (see Table 10.4)	

Totals	**Number of Plant Units**	**Total Number of Plants**			
		Canopy	**Understory**	**Evergreen**	**Shrubs**
Parking Lot Landscaping					
Peripheral Bufferyard					
Street Bufferyard					

Division 4. Bufferyard Installation Responsibility

Peripheral bufferyards shall be installed on the subject property at the time of its development prior to a Certificate of Occupancy/Use. Bufferyard installation responsibilities are influenced by the nature of the parcel abutting the subject property.

Section 1. Adjacent to vacant property

The Subject "developing" property is abutting a vacant or developing parcel.

(A) When a proposed use adjoins a vacant or developing parcel for which a peripheral bufferyard is required by the presence of a zoning district boundary and/or a different development option, that use shall provide one-half (1/2) of the bufferyard width and materials that are required by Figure 10.1, as selected from one of the options for the required level of opacity presented in Table 10.4.

(B) The second use to develop shall, at the time it develops, provide all additional material and land necessary to provide the total bufferyard width and material required between those two uses. A different bufferyard option may be selected to complete the full bufferyard requirement provided that the option selected meets or exceeds one half (.5) of the required opacity of the total bufferyard. In no instance shall the second use to develop, install a structure as part or its entire bufferyard requirement if a structure has been used to meet all or part of the bufferyard requirement of the first use to develop.

Section 2. Adjacent to a developed property

The Subject "developing" property is abutting a previously developed parcel.

(A) If the adjoining use had developed without a bufferyard, the proposed use shall be responsible for installing the total required bufferyard.

(B) If a new residential subdivision is developed adjacent to an existing nonresidential development, the required peripheral bufferyard shall be installed by the developer as part of the residential subdivision plat, site improvements.

Section 3. Existing Plant Materials

Existing plant materials located in required bufferyard areas that will be preserved on the subject property following the completion of development, may be counted as contributing to the landscaping requirements.

Section 4. Bufferyard Use

A bufferyard may be used for passive recreation. It may contain recreational trails provided that: (a) no plant material is eliminated, (b) the total width of the bufferyard is maintained, and (c) all other regulations of the Ordinance are met. In no event, however, shall swimming pools, tennis courts, sports fields, or other such active recreational uses be permitted in bufferyards.

Division 5. Opacity for Bufferyards

The opacity values contained in the Table 10.3 refer to the bufferyard requirements and standards contained in the Table 10.4 Bufferyard Standards. These bufferyards are required between adjacent zoning districts or within the same zoning district between different development options. Passive recreational uses and golf courses, excluding the clubhouse area, parking areas, or any other commercial activity that may be a nuisance, shall be exempt from providing peripheral bufferyards.

Table 10.3 Peripheral Bufferyards: Required Opacity Values

Subject Zoning District & Development Option	Adjacent Zoning District Development Option													
	AG,AT			**ER, RR, LDR**			**MDR, HDR, MU**			**NB, GC**	**MH**	**LI**	**HI**	**OS**
	SF	OR	NR	SF	OR	NR	SF	OR	NR	All	All	All	All	All
AG, AT														
SF	NA	NA	X	NA	NA	X	NA	NA	X	X	X	X	X	NA
OR	Lt	NA	Lt	Lt	NA	Lt	Lt	NA	Md	Md	Hv	Hv	Hv	NA
NR	Md	Lt	NA	Md	Lt	NA	Md	Lt	Lt	Lt	Md	Lt	Md	NA
ER, RR, LDR														
SF	NA	NA	X	NA	NA	X	NA	NA	X	X	X	X	X	NA
OR	Lt	NA	Lt	Lt	NA	Lt	Lt	Lt	Md	Md	Hv	Hv	Hv	NA
NR	Md	Lt	Lt	Md	Lt	NA	Lt	Lt	Lt	Lt	Md	Lt	Md	NA
MDR, HDR, MU														
SF	NA	NA	X	NA	NA	X	NA	NA	X	X	X	X	X	NA
OR	Md	Lt	Lt	Lt	Lt	Lt	Lt	NA	Lt	Lt	Md	Hv	Hv	Lt
NR	Md	Md	Lt	Md	Lt	Lt	Lt	Lt	NA	Lt	Md	Lt	Md	Lt
NB, GC														
All	Md	Md	Lt	Md	Md	Lt	Md	Md	Lt	NA	Lt	Lt	Md	Lt
MH														
All	Hv	Hv	Md	Hv	Hv	Md	Hv	Md	Md	Md	NA	Md	Md	Lt
LI														
All	Hv	Hv	Md	Hv	Hv	Md	Hv	Md	Lt	Lt	Md	NA	Lt	Lt
HI														
All	Hv	Hv	Hv	Hv	Hv	Hv	Hv	Hv	Hv	Md	Md	Lt	NA	Lt
OS														
All	NA	NA	NA	NA	NA	NA	Lt	Lt	Lt	Lt	Lt	Lt	Lt	NA

Key to Table 10.3

Abbreviations		**Bufferyard Type**	
SF:	**Single Family**	**NA:**	**None Required**
OR:	**Other Residential Uses**	**Lt.:**	**Light (Opacity .15)**
NR:	**Nonresidential Uses**	**Md.:**	**Moderate (Opacity .40)**
ALL:	**All Nonresidential Uses**	**Hv.:**	**Heavy (Opacity .70)**

X: None required except for when a new residential subdivision is developed adjacent to an existing nonresidential or mixed-use district. Use the Nonresidential (NR) line in the same Subject Zoning District and the Single Family (SF) column in the Adjacent Zoning District to determine the bufferyard requirement for the subdivision.

Section 1. Plant Materials

(A) For each bufferyard listed, a specific combination of canopy trees, understory trees, evergreen trees and shrubs is required and is listed in Table 10.1. A list of plant species grouped by these categories is presented in Table 10.5. Other plant species with a similar character that are recommended for Zone 5a according to the USDA Plant Hardiness Zone Map are also permitted upon prior approval. Species known to be invasive in Iowa are specifically listed as excluded.

(B) Any existing plant material which otherwise satisfies the requirements of this Section may be counted towards satisfying those requirements.

(C) Bufferyards shall not be located on any portion of an existing or dedicated public or private street or right-of-way.

(D) Where woodlands, floodplains, drainageways, wetlands and prairie are in the bufferyard, the following rules shall apply:

(1) Woodlands: These areas shall be left undisturbed to the width of the narrowest bufferyard that does not include a structure. The trees in the woodland and the length of the woodland area shall be deducted from all bufferyard requirements.

(2) Floodplains: These areas shall be treated as any other bufferyard except that all plant material shall be tolerant of very wet conditions.

(3) Drainageways: These areas shall be treated as any other bufferyard except that all plant material shall be tolerant of very wet conditions.

(4) Native Prairies and Wetlands: These areas shall be left undisturbed and maintained as prairies or wetlands. If the area occupied by a prairie is less than the required buffer width then all trees installed shall be oaks or maples and no understory trees or shrubs shall be required.

(E) All bufferyard areas shall be seeded with lawn or native groundcover unless such vegetation is already fully established.

(F) The exact placement of required plants and structures shall be the decision of each user, except that the following requirements shall be met:

(1) Evergreen shrubs shall be planted in clusters in order to maximize their chance for survival.

(2) Where a combination of plant materials and fencing is used in a peripheral bufferyard, the fence may optionally be located to the interior or toward the more intensive district and the plant material may be located toward the less intensive use.

(3) A developer may establish, through a written and recorded agreement, that the property owner(s) immediately adjacent to their property agree to provide a portion or all of the required landscaping bufferyard on immediately adjacent

portions of their land, thereby exempting the developer from providing all or a portion of the required landscaping plant units on their property.

Section 2. Landscaping Bufferyard Requirements

The following table exhibits the required level of opacity for the various combinations of plant materials (by plant unit, refer to Division 2 Section 2) bufferyard width, and structures necessary to reach given levels of opacity as required by Tables 10.4

Table 10.4 Landscaping Bufferyard Requirements

Required Bufferyard (Opacity)	Structures			No Structure	Bufferyard Width (feet)
	6' Fence	6' Berm	4' Berm		
Heavy (70% opaque)	--	--	--	--	10
	--	--	--	--	20
	3.7	--	--	--	30
	2.0	6.1	7.6	8.7	40
	1.4	4.5	5.9	8.0	50
	1.0	3.5	4.9	6.5	60
	0.6	2.8	4.2	6.0	70
	0.4	2.4	3.8	5.6	80
	0.2	2.0	3.4	5.3	90
	0.0	1.7	3.1	5.2	100
Moderate (40% opaque)	1.1	--	4.2	5.4	10
	0.5	--	3.0	5.0	20
	0.1	--	2.6	4.5	30
	0.0	1.9	2.3	3.6	40
	0.0	1.3	2.1	3.3	50
	0.0	0.8	1.9	3.0	60
	0.0	0.4	1.8	2.9	70
	0.0	0.2	1.8	2.7	80
	0.0	0.0	1.8	2.6	90
	0.0	0.0	1.7	2.6	100
Light (15% opaque)	0.0	0.0	0.2	1.6	10
	0.0	0.0	0.2	1.4	20
	0.0	0.0	0.2	1.2	30
	0.0	0.0	0.1	1.1	40
	0.0	0.0	0.0	1.0	50
	0.0	0.0	0.0	1.0	60
	0.0	0.0	0.0	1.0	70
	0.0	0.0	0.0	1.0	80
	0.0	0.0	0.0	.9	90
	0.0	0.0	0.0	.9	100

-- = not permitted

Section 3. Classification of Plant Materials

For the purposes of this Ordinance, plant materials are classified into four (4) types: overstory trees (shade), understory trees (ornamental), evergreen trees and shrubs (deciduous and evergreen). Examples of species suitable for bufferyard use and compatible with Polk County climate and soil conditions are listed below by type.

Table 10.5 Plant List

Overstory Trees	
Latin Name	**Common Name**
Acer nigrum	(Black maple)
Acer platanoides var.	(Maple)
Acer rubrum	(Red Maple)
Acer saccharinum	(Silver (soft) Maple
Acer saccharum	(Sugar Maple)
Betula lutea	(Yellow Birch)
Betula nigra	(River Birch)
Betula papyrifera	(Paper Birch)
Carya ovata	(Shagbark Hickory)
Celtis occidentalis	(Common Hackberry)
Fagus grandifolia	(American Beech)
Gingko bilboa	(Gingko)
Gleditsia triacanthos inermis	(Honeylocust)
Larix decidua	(European Larch)
Liquidambar styraciflua	(American Sweetgum)
Platanus occidentalis	(Sycamore)
Prunus serotina	(Black Cherry)
Quercus alba	(White Oak)
Quercus borealis	(Northern Red Oak)
Quercus coccinea	(Scarlet Oak)
Quercus macrocarpa	(Bur Oak)
Quercus palustris	(Pin Oak)
Quercus robur	(English Oak)
Quercus veluntina	(Black Oak)
Salix alba	(White Willow)
Salix nigra	(Black Willow)
Tilia americana	(Am. Linden/Basswood)
Tilia cordata	(Littleleaf Linden)
Tilia platyphyllos	(Bigleaf Linden)
Ulmus carpinfolia var.	(Christine Buisman Elm)
Ulmus fulva	(Slippery (red) Elm)
Ulmus glabra	(Scotch Elm)
Zelkova servata	(Japanese Zelkova)

Understory Trees	
Latin Name	**Common Name**
Acir tataricum	(Tatarian Maple)
Aesculus glabra	(Ohio Buckeye)
Amelanchier canadensis	(Shadblow Serviceberry)
Amelanchier laevis	(Allegheney Serviceberry)
Betula pendula	(Cutleaf Birch)
Carpinus caroliniana	(American Hornbeam)
Cercis canadensis	(Eastern Redbud)
Cornus alternfolia	(Pagoda Dogwood)
Crataegus lavallei	(Lavalle Hawthorn)
Crataegus mollis	(Downy Hawthorn)
Crategus var.	(Hawthorn)
Magnolia soulangeana	(Saucer Magnolia)
Magnolia stellata	(Star Magnolia)
Malus var.	(Crabapple)
Malus var.	(Crabapple)
Ostrya virginiana	(American Hophornbeam)
Phellodendron amurense	(Amur. Corktree)
Primus maackii	(Amur Chokecherry)
Prunus americana	(Plum)
Prunus padus commutata	(Mayday Tree)
Prunus virginiana	(Common Chokecherry)
Salix alba var.	(Weeping Willow
Salix blanda	(Wisc. Weeping Willow)
Salix caprea	(Goat/Pussy Willow)
Salix discolor	(Pussy Willow)
Syringa amurensis japonica	(Japanese Tree Lilac)
Syringa pekinensis	(Pekin Lilac)
Evergreen Trees	
Latin Name	**Common Name**
Abies concolor	(White Fir)
Picea abies	(Norway Spruce)
Picea glauca var.	(White Spruce)
Picea pungens var.	(Colorado Spruce)
Pinis banksiana	(Jack Pine)
Pinus nigra	(Austrian Pine)
Pinus resinosa	(Red (Norway) Pine)
Pinus strobus	(Eastern White Pine)
Pinus sylvestrius	(Scotch Pine)
Psuedotsuga taxifolia	(Douglas Fir)
Tsuga canadensis	(Canada Hemlock)

Deciduous Shrubs				
Latin Name	**Common Name**		**Latin Name**	**Common Name**
Acanthopanax sieboldianus	(Fiveleaf Aralia)		Primus cistena	(Purple Leaf Sandcherry)
Amorpha fruiticosa	(Indigobush Amorpha)		Primus maritima	(Beach Plum)
Aronia arbutifolia	(Red Chokecherry)		Primus tomentosa	(Manchu Cherry)
Berberis mentorensis	(Mentor Barberry)		Primus triloba	(Plena)(Doubleflowering Plum)
Buxus microphylla koreana	(Korean Littleleaf Box)		Prunus glandulosa flora plena	(Double Almond Cherry)
Calycanthus floridus	(Common Sweetshrub)		Prunus pumila	(Hansen's Bush Cherry)
Caragana frutex	(Russian Peashrub)		Ptelea trifoliata	(Common Hoptree)
Caraganea arborescens	(Siberian Peashrub)		Rhodotypos scandens	(Black Jetbead)
Cephalanthus occidentalis	(Common Buttonbush)		Rhus aromatica	(Fragrant Sumac)
Chaenomeles lagenana var.	(Common Floweringquince)		Rhus copallina	(Flameleaf Sumac)
Chionanthus virginicus	(White Fringetree)		Rhus glabra	(Smooth Sumac)
Cornus alba sibirica	(Siberian Dogwood)		Rhus typhina var.	(Staghorn Sumac)
Cornus amomum	(Silky Dogwood)		Ribes alpinum	(Alpine Currant)
Cornus racemosa	(Gray Dogwood)		Ribes cynosbati inerme	(Smooth Pasture Gooseberry)
Cornus sanguinea	(Bloodtwig Dogwood)		Ribes odoratum	(Clove (fragrant) Currant)
Cornus stolonifera flaviramea	(Yellowtwig Dogwood)		Rosa harisoni	(Harison Yellow Rose)
Cornus stoloniferea	(Redosier Dogwood)		Rosa hugonis	(Father Hugo Rose)
Corylus americana	(Am. Filbert)		Rosa primula	(Primrose Rose)
Cotoneaster apiculata	(Cranberry Cotoneaster)		Rosa rubrifolia	(Redleaf Rose)
Cotoneaster divaricata	(Spreading Cotoneaster)		Rosa setigerea	(Prairie Rose)
Cotoneaster lucida	(Hedge Cotoneaster)		Rosa var:	(Rose)
Cotoneaster multiflora calocarpa	(Manyflowered Cotoneaster)		Sambucus canadensis	(American Elder)
Euonymus alatus	(Winged Euonymus)		Sorbaria sorbifolia	(Ural Falsepirea)
			Spiraea arguta	(Garland Spirea)
Euonymus artopurpureus	(Eastern Wahoo)		Spiraea billardi	(Billiard Spirea)
Euonymus fortunei radicans	(Sarcoxie Euonymus)		Spiraea prunifolia plena	(Double Bridlewreath Spirea)
Forsythia suspensa	(Weeping Forsythia)		Spirea vanhouttei	(Bridalwreath)
Forsythia var.	(Forsythia)		Spirea var.	(Spirea)
Hamamelis virginiana	(Common Witchhazel)		Staphylea trifolia	(American Bladdernut)
Hydrangea arborescens grandiflora	(Snowhill Hydrangea)		Symphoricarpos albus	(Common snowberry)
Hydrangea paniculata	(Peegee Hydrangea)		Symphoricarpos chenaulti	(Chenault Snowberry)
Hypericum kalmianum	(Kalm St. Johnswolt)		Symphoricarpos orbiculatus	(Coralberry)
Hypericum prolifecum	(Golden St. Johnswolt)		Syringa oblata dilatata	(Korean Early Lilac)

Deciduous Shrubs (cont)				
Latin Name	**Common Name**		**Latin Name**	**Common Name**
Ilex verticillata	(Common Winterberry)		Syringa var.	(Lilac)
Kolkwitzia amabilis	(Beautybush)		Syringa vulgaris	(Common Lilac)
Ligustrum Var.	(Privet)			
Lonicera nana	(Clavey Honeysuckle)			
Lonicera zabeli	(Zabel Honeysuckle)			
Malus	(Crabapple)			
Myrica pennsylvanica	(Northern Bayberry)			
Philadelphus coronarius	(Sweet Mockorange)			
Philadelphus lemoinei var.	(Innocence Mockorange)			
Philadelphus var.	(Minnesota Snowflake)			
Philadelphus var.	(Mockorange Galahad)			
Philadelphus virginalis var.	(Virginal Mockorange)			
Physocarpos opulifolius var.	(Ninebark)		Viburnum trilobum	(American Cranberry Bush)
Physocarpus monogynus	(Mountain Ninebark)		Zanthoxylum americanum	(Common Pricklyash)
Potentilla fruticosa	(Bush Cinquefoil)			
Evergreen Shrubs			**Evergreen Shrubs**	
Latin Name	**Common Name**		**Latin Name**	**Common Name**
Juniperus chinensis pfitzeriana compacta	(Compact Pfitzer Juniper)		Juniperus virginiana kosteri	(Koster Red Cedar)
Juniperus chinensis sargenti	(Sargent Juniper)		Juniperus virginiana var.	(Red Cedar)
Juniperus chinensis var.	(Chinese Juniper)		Pinus mugo mughus	(Mugho Pine)
Juniperus communis depressa	(Oldfield Juniper)		Taxus canadensis	(Canada Yew)
Juniperus glauca hetzi	(Hetz Juniper)		Taxus cuspidata capitat	(Japenses Yew)
Juniperus horizontalis admirabilis	(Prostrate Juniper)		Taxus cuspidata var.	(Spreading Japanese Yew)
Juniperus horizontalis var.	(Creeping Juniper)		Taxus cuspidata var.	(Japanese Yew)
Juniperus procumbens	(Japgarden Juniper)		Taxus media browni	(Browns Anglojap Yew)
Juniperus sabina	(Savin Juniper)		Taxus media hicksi	(Hicks Anglojap Yew)
Juniperus sabina var.	(Vonehron Savin Juniper)		Theya occidentalis globosa	(Globe Arborvitae)
Juniperus scopulorum	(Rocky Mt. Juniper)		Theya occidentalis robusta	(Ware Arborvitae)
Juniperus squamata meyeri	(Meyer Singleseed Juniper)		Thuja occidentalis var.	(Pyramidal Arborvitae)

Invasive Species specifically restricted from being allowed in landscaping plans	
Shrubs:	
Latin Name	**Common Name**
Berberis thunbergii	Japanese barberry
Berberis vulgaris	European barberry
Elaeagnus angustifolia	Russian olive
Elaeagnus umbellate	autumn olive
Euonymua alata	burning bush
L. mackii	amur honeysuckle
L. morrowii	Morrow's honeysuckle
L. tartarica	tatarian honeysuckle
L. x bella	Bell's honeysuckle (a hybrid of invasive honeysuckle)
Lonicrea spp.	bush honeysuckles
R. catharica	common buckthorn
R. frangula	glossy buckthorn
Rhamnus ssp.	buckthorns
Viburnum spp. V. opulus	Plant only Viburnums native to Iowa
Trees:	
Acer ginnala	Amur maple
Acer plantoides	Norway maple
Ailanthus altissima	tree of heaven
Alnus glutinosa	European alder
Populus alba	white poplar
Robinia pseudoacacia	black locust
Ulmus pumilla	Siberian or Chinese elm
Fraxinus americana	(White Ash)
Fraxinus pennsylvanica	(Red Ash)
Fraxinus pennsylvanica lanceolata	(Green Ash)

Article 11. Signs

Division 1. General Provision

Section 1. Purpose

The purpose of this Article is to regulate the placement of signs, their size and number and establish minimum regulations for the display of signs.

Section 2. Sign Permit Required

No person shall erect, alter, or relocate any sign within the unincorporated areas of the County without first obtaining approval of a Sign Permit. The repainting, changing of parts, and preventive maintenance of signs located on the site shall not be deemed alterations requiring a Sign Permit.

(A) Application for Sign Permit.

All applications for Sign Permits shall be made in writing on a form supplied by the Jurisdiction and shall contain or have attached thereto the following information:

(1) A complete application form as approved by the Zoning Administrator and appropriate fee;

(2) A site plan showing data relating to the number of signs to be placed on the lot, locations, design, materials, colors, height, width, depth, square footages;

(3) Permits for signs shall include a scaled drawing showing the entire building facade or tenant space façade, the proposed sign location, and any existing facade signs;

(4) The name, address and telephone number of the sign owner and of the sign erector; and

(5) Any other pertinent data as may be required to ensure compliance with this section.

(B) Zoning Compliance.

A Certificate of Occupancy shall be on file for the proposed property. The property must be in compliance with all regulations of this Ordinance prior to any Sign Permit being issued for a property/use. If Certificate of Occupancy is not on file then one shall be applied for as specified in Article 18 on the appropriate forms and paying the appropriate fees prior to the issuance of Sign Permit.

(C) Approval of Permits.

Applications for Sign7 Permits shall be reviewed for compliance with this Ordinance, and within five (5) working days after acceptance of same, the Zoning Administrator7 shall inform the applicant whether the Permit has been granted.

(D) Expiration of Permits.

(1) Permits for temporary signs shall expire ninety (90) days from the date of issuance of such Permit unless otherwise provided.

(2) The permit holder for signs must erect the entire sign with current or active

copy within one hundred eighty (180) days of the date of issuance of the permit. The permit will expire if signs are not installed within one hundred eighty (180) days after the date of issuance. If the permit expires, a new permit must be applied for and issued prior to the installation of the sign.

(E) Exceptions to Sign Permit

The following signs do not require a sign permit but shall follow the standards as stated and shall observe the requirements of Division 2 of this Article:

(3) Memorial signs, tablet or plaque displayed on public property or in cemeteries.

(4) One address numerals sign not exceeding two (2) square foot in area.

(5) Legal notices.

(6) Traffic and parking signs which bear no advertising and are no larger than ten (10) square feet.

(7) Political Signs. Temporary signs advertising political parties, candidates for election or issues on the ballot, may be erected or displayed and maintained provided they meet the requirements of State Code 68A.406 and are not erected or displayed earlier than seventy (70) days prior to the election to which they pertain.

(8) Real Estate Signs. Only one (1) real estate sign may be located adjacent to each separate street frontage of a lot. Signs shall be located entirely within the property to which the signs apply; they shall not be directly illuminated. Real estate signs shall be removed within twenty (20) days after a deed has been recorded for the sale, or a lease signed for the rental or lease of the property. Real estate signs shall not exceed the following maximum area requirements:

(a) For the GC – General Commercial, LI - Light Industrial and HI - Heavy Industrial districts: thirty-two (32) square feet.

(b) For all other districts: six (6) square feet.

Section 3. Determining Sign Face Area of a Sign

The sign face area of a sign shall be defined as follows:

(A) In the case of ground, marquee and off-site signs, the entire surface area of the sign on which copy could be placed is the sign face. The supporting structure or bracing of a sign shall not be counted as a part of the sign face area. Where a sign has two (2) display faces back to back, the area of only one (1) face shall be considered the sign face area. Where a sign has more than one (1) display face, all areas which can be viewed simultaneously shall be considered the sign face area.

(B) For a sign (other than freestanding, marquee, or off-site) whose message is located within a frame or where the background is fabricated to create a border around the message, the sign face area shall be the total area of the border and message.

(C) For a sign (other than freestanding, marquee, or off-site) whose message is applied to a background which provides no border or frame, the sign face area shall be the area of the smallest rectangle which can encompass all words, letters, figures, emblems, and any other elements of the sign's message.

Division 2. Prohibited sign movement, decorations, and placement

Section 1. All signs shall meet the following provisions:

(A) No sign shall create any flashing, fluttering, undulating, swinging, rotating, scrolling or other movement.

(B) No decorations (pennants, balloons, streamers, etc.) shall be permitted to be used in place of or with any sign.

(C) No sign shall obstruct a clear view to and from traffic along any street right-of-way, entrance, or exit.

(D) No signs, excluding traffic signs and similar regulatory notices except those of a duly constituted governing body, shall be allowed to project or be located within road right-of-way lines.

Division 3. Permitted Signs

No signs shall be permitted for any use except as provided in this Division. Each use permitted signage shall be allowed at least one sign and some uses shall be permitted more than one sign as outlined in the table below.

Table 11.1 Sign Type Permitted by Use

Use	Free standing/ Monument	Wall	Marquee	Graphic
Shopping Center	1 per entrance	Y	O	O
Office/Business Park/&Multi-tenant Buildings	1 per entrance	Y	N	N
Industrial Park	1 per entrance	Y	N	O
Residential Development	1 per entrance	N	N	N
Bank	1	Y	O	N
Institutions	1	Y	O	N
Industrial	O	Y	N	O
Gas Station/Convenience Store	1	Y	O	N
Motel-Hotel	1	Y	O	N
Movie Theater	1	Y	O	O
Office	O	Y	N	N
Restaurant	1	Y	O	N
Other Commercial	O	Y	O	N

Key to Table 11.

1 per entrance = one sign per road entrance onto a public street is permitted.
Y = this sign type is permitted.
O = Optional this sign type is permitted. Total site square footage not to exceed amount from Division 3, Section 1, Wall Signs, except for bonuses provided elsewhere in this ordinance. This total square footage is a combination for all signage on the site.
N = not permitted.
1 = one freestanding sign is permitted per parcel.

Section 1. Wall signs

(A) One square foot of sign area is permitted for every lineal foot of building frontage (adjacent to road right-of-way) up to a maximum of 150 sq. ft. per building located in the Heavy Industrial District and up to a maximum of 120 sq. ft. per building located in all other districts.

(B) Shopping centers, office & business parks, campus, industrial parks and other multi-tenant buildings are permitted an additional 20% of wall signage.

(C) The amount of wall signage permitted on multi-tenant buildings per tenant is prorated. The percentage of lineal footage each tenant occupies of the building is equal to the percentage of the total wall signage permitted for the building. (Example: A 300' long multi-tenant building is permitted a total of 144 sf of signage. Tenant A occupies 60' of frontage or 20% of the building therefore Tenant A is allowed 28 sf or 20% of 144 sf of signage permitted for the multi-tenant building)

(D) Adult uses are permitted one wall sign identifying business name. No freestanding sign is permitted.

Section 2. Freestanding signs

See Table 11.1 for uses permitted a separate allotment for freestanding signage.

(A) Shopping centers, multi-tenant, office & business parks, industrial parks, and residential developments are permitted 30 sq. ft. of signage per 100 lineal feet of site frontage up to a maximum of 160 sq. ft. in Heavy Industrial District and 120 sq. ft. of signage in all other districts.

(B) Banks, institutions, gas stations & convenience stores, motel/hotels and movie theaters and restaurants are permitted 20 sq. ft. per 100 lineal feet of site frontage up to a maximum of 90 sq. ft. in Heavy Industrial District and 60 sq. ft. in all other districts.

(C) On lots without a structure, a maximum signage of up to thirty-two (32) sq. ft. is permitted

Section 3. Marquee signs

See Table 11.1 for uses permitted marquee signage.

(A) Shopping centers, banks, institutions, gas station/ convenience stores, hotels and movie theaters, restaurants and other non-specified commercial uses are permitted marquee signage as a sign option for part of their permitted wall signage as allowed in Section 1.

(B) The square footage Marquee signage permitted is derived from the amount permitted for wall signs in Section 1 and shall not exceed 50% of the total area of signage permitted.

Section 4. Graphic signs

(A) Shopping centers, industrial parks, industrial and movie theaters are permitted graphic signage as a sign option for part of their permitted wall signage as allowed

in Section 1.

(B) The square footage Graphic signage permitted is derived from the amount permitted for wall signs in in Section 1 and shall not exceed 50% of the total area of signage permitted.

Division 4. Detailed Sign Regulations

Section 1. Development Signs

(A) All development signs shall be freestanding signs.

(B) Residential development signs shall only provide the name of the subdivision.

Section 2. Off-site Signs (Billboards)

(A) Standards

(1) The height of such sign, if free standing, shall not exceed fifty (50) feet above the elevation of the highest road faced by such sign, said elevation to be measured from the closest point of the road to the adjacent sign.

(2) Such signs shall meet applicable zoning district setback requirements for principal structures within that district.

(3) Such signs must be constructed on a single or double pole steel structure and may contain separate side-by-side, back-to-back or "V" type sign faces, provided such separate faces are attached to one structure.

(4) No such sign shall be permitted which would be located within one hundred (100) feet of (a) any lot in a ER, RR, LDR, MDR, HDR, MU or MH district which either is used for residential purposes or is vacant, or (b) any lot on which is located a public square, public park, public or parochial school, church, funeral home, cemetery, public library or public museum.

(5) No such sign shall be permitted within one thousand (1000) feet of any other such sign. The minimum distances between signs facing the same direction shall apply without regard to the side of the highways on which the signs may be located and shall be measured along the centerline of the highway between points directly opposite the signs.

(6) No such sign shall be permitted to exceed 300 square feet in area in the GC District and 975 square feet in the LI and HI District

(B) Additional Standards

(1) Off-site signs shall also meet the requirements of the Iowa Administrative Code, Transportation Department [761], Chapter 117 Outdoor Advertising.

Section 3. Directional Signs

Off-premise directional signs are permitted so as to give sufficient notice of the location of governmental facilities, hospitals, colleges, schools, churches and unincorporated communities. The maximum size of each sign shall be four (4) square feet. Each of these facilities is only permitted two (2) off-site directional signs. The locations of the signs are not

permitted in the public right-of-way and the property owner where sign is to be placed must provide written consent.

Section 4. Electronic Message Signs

(A) Electronic Message signs shall only be allowed on site for use by governmental entities including federal, state, county, city and public school owned property. Electronic Message Signs shall meet the following requirements:
  (1) The sign and/or sign text shall not scroll, flash, undulate or otherwise move in any manner.
  (2) The electronic sign may only display information for activities or services occurring or provided by the governmental entity. Such electronic signs shall not advertise a company, product, or service of any private entity.

(B) Electronic signs displaying Time and Temperature and fuel prices are permitted. Such sign or portion of sign shall be part of permitted sign area.

(C) An electronic sign identifying a business “OPEN” not exceeding two (2) square feet shall be permitted. Such sign shall be in addition to permitted sign area.

(D) Off-site signs (Billboards) shall be permitted light-emitting diode (LED) displays as permitted by Iowa Administrative Code, Transportation Department [761], Chapter 117 Outdoor Advertising.

Section 5. Informational/ Educational Signs

Informational/ Educational signs shall only be allowed on site for use by governmental, quasi-governmental, public service and cemetery uses. Signs shall not provide any kind of product advertisement. Signs shall not exceed thirty-two (32) square feet of area and shall follow all of the standards otherwise required for signs by this Section.

Section 6. Temporary Signs

Portable signs and signs for special events and promotions shall require a temporary sign permit issued by the Planning Administrator or a designee. A fee shall be charged for this permit. A temporary permit for a portable sign shall be valid for fourteen (14) days.

No establishment or individual shall be permitted to obtain a temporary permit for a portable sign more than four (4) times in one (1) year. Portable signs shall not exceed thirty-two (32) square feet of area and shall follow all of the standards otherwise required for signs by this Section.

Division 5. Height/Clearance/ Location/ Illumination

Section 1. Sign Height

(A) The height of a freestanding sign shall be measured from the average ground level to the highest point of the sign face area or its supporting structure, whichever is

greater.

(B) Maximum permitted height for freestanding signs is 10 feet.

Section 2. Sign Clearance

(A) Parallel wall signs shall not extend beyond the edge of any wall or other surface to which they are mounted, nor shall they project more than eighteen (18) inches from the wall surface.

(B) The top of a wall sign shall be no higher than the top of the building height. Roof mounted signs are not permitted.

Section 3. Sign Location

(A) Signs may be located within a required bufferyard along a right-of-way, except where otherwise prohibited by this Ordinance.

(B) No signs, however, shall be located along any side or rear lot line within a required building setback where a use is adjacent to a residential zoning district.

Section 4. All Illuminated signs

Illuminated signs shall divert glare and keep light from encroaching beyond property boundaries and into the road right-of-way

Article 12. Exterior Lighting

Division 1. Purpose

The purpose of this Article is to ensure lighting is safe, restricts glare, and limits light encroachment onto adjacent properties by regulating the spill-over of light and glare on persons operating motor vehicles, pedestrians, and land uses in the proximity of the light source. Exterior lighting shall restrict and divert glare and keep light from encroaching into the road right-of- way and beyond property lines.

With respect to motor vehicles in particular, safety considerations form the basis of the regulations contained herein. In other cases, both the nuisance and hazard aspects of glare are causes for the regulation.

Section 1. Exemptions

Public Street lighting shall be exempt from the standards of this ordinance. Public Street Lighting shall conform to the standards set forth by the Iowa Department of Transportation and the Polk County Secondary Roads.

Section 2. Restrictions

(A) No flickering or flashing lights shall be permitted.

(B) Light sources or luminaries for nonresidential uses when adjacent to residential zoned property shall not be located within bufferyard areas except on pedestrian walkways.

Section 3. Exterior Lighting Plan Required

Lighting plans shall be required for all non-residential development. The lighting plan shall be submitted at the time of site plan submittal or at the time of electrical and/or building permit if a site plan is not required. Lighting Plans will be reviewed to determine whether the requirements of this Section have been met and that adjoining property will not be adversely impacted by the proposed lighting.

(A) The lighting plan shall be prepared by a certified architect, landscape architect or lighting designer.

(B) The lighting plan shall show the proposed location of exterior light, proposed foot candles on a minimum 10’ x 10’ grid, elevation drawings showing the light pole height, type of fixture, cut-off and projected angle.

Section 4. Exterior lighting options

Exterior lighting shall be a No cutoff, Total cutoff up to ninety (90) degrees, or total cutoff of light at an angle less than ninety (90) degrees. The lighting shall meet the standards set for each type of fixture.

(A) **No Cutoff light fixture**

When a light source or luminary has no cutoff (see illustration below), the maximum permitted illumination and the maximum permitted luminary height shall be:

Table 12.1 No Cutoff fixture

Use and District	Max. Permitted Illumination (in footcandles)	Maximum Permitted Height
All residential in all districts	.20	10 ft.
All non residential in AG, AT, ER, MU, GC, NB, MH	.20	15 ft.
All nonresidential in LI and HI	.30	20 ft.

(1) Exterior lighting fixtures frequently produce unsightly glare. At times, the glare may even result in a safety hazard. The standards imposed by this Section are designed to reduce the hazard and nuisance of these fixtures.

(2) Lighting on uses adjacent to residential zoning districts shall not exceed .2 footcandles at the property line. This requirement shall also apply to residential properties adjacent to residential properties.

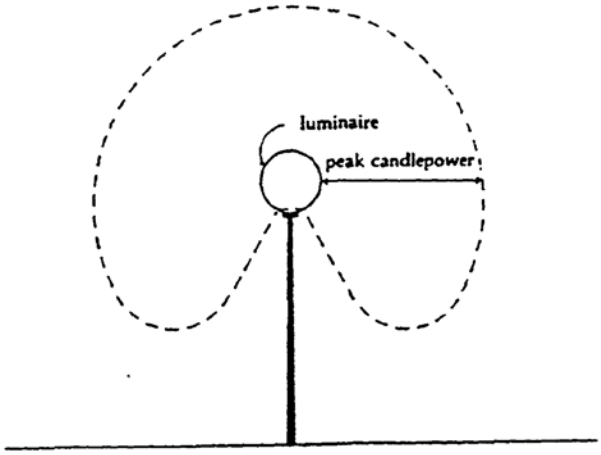

NO CUTOFF LUMINAIRE

(B) **Total cutoff of an angle up to ninety (90) degrees light fixture**

When a luminary has total cutoff up to ninety (90) degrees (see illustration below), the maximum illumination and the maximum permitted luminary height shall be:

Table 12.2 Total cutoff of an angle up to ninety (90) degrees fixture

Use and District	Max. Permitted Illumination (in footcandles)	Maximum Permitted Height
All residential in all districts	.30	15 ft.
All non residential in AG, AT,ER,RR	.50	20 ft.
All nonresidential in LDR, MDR, HDR, MU, NB,GC, MH	.75	25 ft.
All nonresidential in LI and HI	1.50	35 ft.

(1) This standard is designed to ensure that no light is emitted above a horizontal line parallel to the ground. In order to achieve total cutoff at ninety (90) degrees, such a luminary shall emit maximum (peak) candlepower at an angle not exceeding seventy-five (75) degrees. This angle is formed by the line at which maximum candlepower is emitted from the light source and a line perpendicular to the ground from the light source.

(2) Lighting on uses adjacent to residential zoning districts shall not exceed .2 footcandles at the property line. This requirement shall also apply to residential properties adjacent to residential properties.

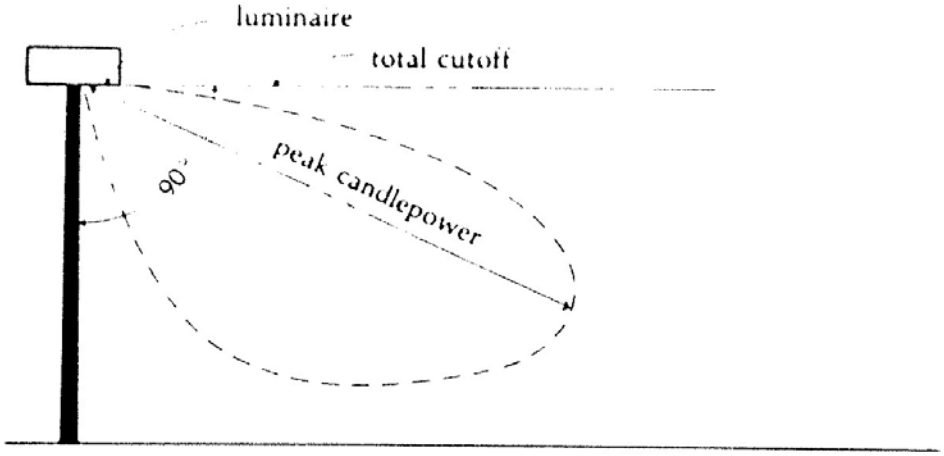

90 CUTOFF LUMINAIRE

(C) **Total cutoff of light at an angle less than ninety (90) degrees light fixture**

When a luminary has total cutoff of light at an angle less than ninety (90) degrees (see illustration below) and is located so that the bare light bulb, lamp, or light source is completely shielded from the direct view of an observer five (5) feet above the ground at the point where the cutoff angle intersects the ground, then the maximum permitted illumination and the maximum permitted height of the luminary shall be:

Table 12.3 Total cutoff of light at an angle less than ninety (90) degrees fixture

Use and District	Max. Permitted Illumination (in footcandles)	Maximum Permitted Height
All residential in all districts	.50	20 ft.
All nonresidential in AG, AT,ER,RR	1.00	25 ft.
All nonresidential in LDR, MDR, HDR, MU, NB, GC, MH	2.00	30 ft.
All nonresidential in LI and HI	4.00	50 ft.

(1) This type of light fixture may be taller and provide greater illumination than the other two (2) types specified previously, because the design of this fixture ensures that its light source will not be directly visible off-site.

(2) Lighting on uses adjacent to residential zoning districts shall not exceed .2 footcandles at the property line. This requirement shall also apply to residential properties adjacent to residential properties.

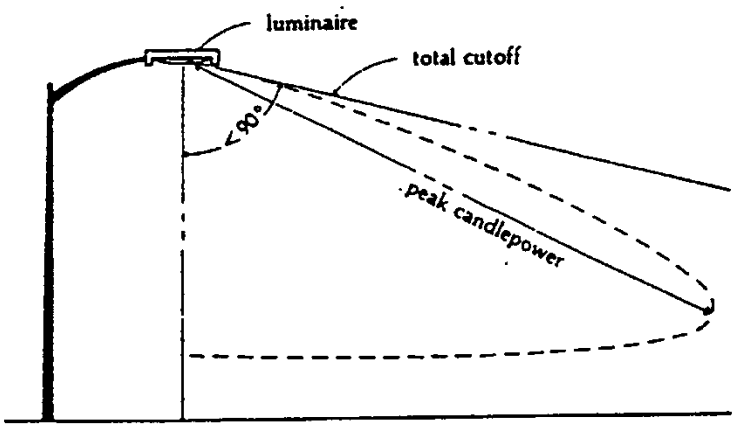

LUMINAIRE WITH LESS THAN 90 CUTOFF

Division 2. Outdoor Recreational Uses

Ball diamonds, playing fields, and tennis courts have unique requirements for nighttime visibility and generally have limited hours of operation. These uses may be exempted from the exterior lighting standards of Section 4 if the applicant can satisfy the Board of Adjustment, upon site plan review, that the following requirements are met:

(A) The site plan must meet all other requirements of the Exterior Lighting Standards and of this Ordinance; and

(B) Any exterior light sources shall not exceed the maximum permitted post height of eighty (80) feet; and

(C) If the luminary is shielded in either its orientation or by a landscaped bufferyard to prevent light and glare spill-over to adjacent residential property, then the luminaries may exceed a total cutoff angle of ninety (90) degrees. The maximum permitted illumination at the interior bufferyard line shall not exceed .2 footcandles.

Article 13. Off-Street Parking and Loading

These standards ensure the provision of adequate loading and parking areas for each land use. The following sections describe required standards for off-street parking and off-street loading.

Division 1. Off- Street Parking Standards

Section 1. Terms defined

(A) Reference herein to "employee(s) on the largest work shift" means the maximum number of employees working at the facility during a single given day, regardless of the time period during which this occurs, and regardless of whether any such person is a full-time employee. The largest work shift may occur on any particular day of the week, or during a lunch or dinner period in the case of a restaurant.

(B) The term "capacity" as used herein means the maximum number of persons which may be accommodated by the use as determined by its design or by fire code regulations, whichever is greater.

Section 2. Required Number of Parking Spaces

The following minimum number of parking spaces shall be required of the uses specified below.

(A) Agricultural

(1) Nursery Uses: one (1) space per employee on the largest work shift, plus one (1) space per two hundred (200) square feet of gross floor area of inside sales or display.

(B) Institutional

(1) Outdoor Recreational

(a) Golf courses (nine and eighteen hole): thirty-six (36) spaces per nine (9) holes, plus one (1) space per employee on the largest work shift, plus fifty (50) percent of the spaces otherwise required for any accessory uses (e.g., bars, restaurants.)

(b) Outdoor swimming pool: one (1) space per seventy-five (75) square feet of gross water area.

(c) Tennis court: three (3) spaces per court.

(d) Public service uses: one (1) space per employee on the largest work shift, plus one (1) space per company vehicle normally stored or parked on the premises.

(e) Residential uses: one (1) space for units containing one (1) bedroom and two (2) spaces for units containing two (2) or more bedrooms. (e.g. cabins)

(f) Camps, day or youth: one (1) space per employee on the largest work shift, plus one (1) space per camp vehicle normally parked on the premises.

(g) Other Outdoor Recreational Uses: one (1) space per four (4) expected

patrons at maximum capacity.

(2) Indoor Institutional

(a) Church: one (1) space per four (4) seats to the maximum capacity.

(b) Community and recreation center: one (1) space per two hundred and fifty (250) square feet of gross floor area, or one (1) space per four (4) patrons to the maximum capacity, whichever is greater, plus one (1) space per employee on the largest work shift.

(c) Day or nursery school: one (1) space per teacher and per other employees on the largest work shift, plus one (1) off-street loading space per six (6) students.

(d) Group dwellings: one (1) space per bedroom or sleeping room.

(e) Libraries and museums: one (1) space per two hundred and fifty (250) square feet of floor area or one (1) space per four (4) seats to the maximum capacity, whichever is greater, plus one (1) space per employee on the largest work shift.

(f) Schools:

1) Elementary and junior high: one (1) space per teacher and per staff member, plus one (1) space per two (2) classrooms.

2) Senior high: one (1) space per teacher and per staff member on the largest work shift, plus one (1) space per five (5) non-bussed students.

3) College: one (1) space per staff member on the largest work shift, plus one (1) space per two (2) students of the largest class attendance period.

4) School, commercial or trade: one (1) space per three (3) students, plus one (1) space per employee (including faculty) at capacity class attendance period.

5) Private clubs: one (1) space per three (3) persons to the maximum capacity of the facility.

(3) Institutional Residential

(a) Monasteries and convents: one (1) space per six (6) residents, plus one (1) space per employee on the largest work shift, plus one (1) space per five (5) chapel seats, if the public may attend.

(b) Nursing homes: one (1) space per six (6) patient beds, plus one (1) space per employee on the largest work shift, plus one (1) space per staff member and per visiting doctor.

(c) Other Institutional, Indoor Recreational, and Special Residential Uses: one (1) space per three (3) patrons to the maximum capacity, plus one (1) space per employee on the largest shift.

(C) Commercial

(1) Convenience Commercial

Convenience grocery: one (1) space per one hundred (200) square feet of gross floor area.

(2) Office

(a) Offices, general: three (3) spaces per one thousand (1,000) square feet of gross floor area.

(b) Medical Offices: five (5) spaces per 1000 gross square feet of building area.

(3) Commercial Retail

(a) Grocery or supermarket: three (3) spaces per one thousand (1000) square feet of gross floor area of customer sales and service, plus one (1) space per two hundred (200) square feet of gross floor area of storage.

(b) Shopping center (less than one hundred thousand (100,000) square feet of floor area): five (5) spaces per one thousand (1,000) square feet of floor area.

(c) Shopping center, regional (one hundred thousand (100,000) square feet or more of floor area): four (4) spaces per one thousand (1,000) square feet of gross floor area.

(4) General Retail: 4 spaces per 1000 sq. ft. of gross floor area

(5) Heavy Retail/Services

(a) Non–vehicle repair (other) services: one (1) space per three hundred (300) square feet of gross floor area, plus one (1) space per employee on the largest work shift.

(b) Vehicle sales and service: maximum three spaces per service bay for vehicles awaiting repair, one (1) space per six-hundred (600) square feet of gross floor area, plus one (1) space per employee on the largest work shift. Display areas for vehicle sales are in addition to parking spaces.

(c) Vehicle repair and maintenance services: maximum three spaces per service bay for vehicles awaiting repair, one (1) space per (600) square feet of gross floor area, plus one (1) space per employee on the largest work shift.

(6) Services

(a) Beauty and barber shops: three (3) spaces per operator or one (1) space per one hundred (100) square feet of gross floor area, whichever is larger, plus one (1) space per employee on the largest work shift.

(b) Funeral home: one (1) space per four (4) patron seats or twenty-five (25) spaces per chapel unit, whichever is greater.

(c) Hospital: two (2) spaces per one (1) patient beds, plus one (1) space per staff doctor and other employee on the largest work shift.

(7) Personal services: one (1) space per two hundred (200) square feet first floor gross floor area, plus one (1) space per three hundred (300) square feet of any additional floor area for customer service, plus one (1) space per employee on the largest work shift.

(8) Restaurants

(a) Restaurant, standard: twelve (12) spaces per one thousand (1000) square feet of building area or one (1) spaces per three (3) patron seats, whichever is greater, plus one (1) space per employee on the largest work shift.

(b) Fast-food restaurant: Fourteen (14) spaces per one thousand (1000) square feet of gross floor area, plus one (1) space per employee on the largest work shift.

(9) Drive-In Facility

(a) Banks: five (5) spaces per one thousand (1000) square feet of gross floor area, plus five (5) spaces of staging spaces per drive-in lane.

(b) Restaurant, fast-food with drive-in: one (1) space per two seats, plus 5 spaces of staging spaces per drive-in lane.

(c) Other uses with drive-in facilities: 5 spaces per 1000 sq. ft. of gross floor area plus 5 spaces of staging spaces per drive-in lane.

(10) Commercial Lodging

Hotel or motel: one (1) space per room or suite, plus one (1) space per every three (3) employees on the largest work shift, plus one (1) space per three (3) persons to the maximum capacity of each public meeting and/or banquet room, plus fifty (50) percent of the spaces otherwise required for accessory uses (e.g. restaurants and bars.)

(11) Adult Uses

Taverns, dance halls, night clubs, and lounges: one (1) space per fifty (50) square feet of gross floor area, plus one (1) space per employee on the largest work shift.

(12) Outdoor Commercial Amusement

Marina: one (1) space per one (1) boat slip, plus a number of large ten (10) foot by forty (40) foot spaces for trailers, as determined by the County on a case-by-case basis.

(13) Indoor Commercial Amusement

(a) Theaters and auditoriums: one (1) space per four (4) patrons based on maximum capacity. These requirements may be satisfied on a space-by-space basis by the facility providing written proof that it has the use of a nearby parking lot available to its patrons (e.g. by contractual agreement.)

(b) Bowling alley: five (5) spaces per lane, plus one (1) space per employee on the largest work shift.

(c) Skating rink, ice or roller: five (5) spaces per one thousand (1000) square feet of gross floor area.

(14) Other commercial amusement not listed above: one space per 4 seats. If no

seats, 1 space per 1000 sq. ft. of gross building and outdoor activity area.

(15) Other Commercial and Entertainment

(a) Businesses attracting customers – 1 space per 400 sq. ft. of gross floor area of customer sales and service, storage and office plus one (1) space per employee on the largest work shift.

(b) Businesses with limited or no customers – 1 space per 600 sq. ft. of gross floor area of customer sales and service, storage and/or office.

(c) If the use has at least one hundred thousand (100,000) square feet of gross floor area, then four (4) spaces per one thousand (1,000) square feet of gross floor area shall be provided.

(16) Flexible (multi-use) Space Buildings

(a) 6 spaces per 1000 sq. ft. of gross building area. In case of big box or large franchise uses with a minimum of 25,000 sq. ft. of gross floor area, apply parking standard specific to use; which ever is greater.

(b) Mini Warehousing/Self Storage: 2 spaces plus one (1) space per 20,000 square feet of gross floor area.

(D) Industrial

(1) Manufacturing: one (1) space per employee on the largest work shift, plus one (1) space per four thousand (4000) square feet of gross floor area.

(2) Truck terminal: one (1) space per employee on the largest work shift, plus one (1) space per truck normally parked on the premises, plus one (1) space per three (3) patrons to the maximum capacity.

(3) Warehousing: one (1) space per employee on the largest work shift, plus one space for every four thousand (4,000) square feet of gross floor area.

(4) Auto Storage two (2) spaces plus one (1) space per fifty (50) vehicles or boats stored.

Section 3. Shared Parking Provisions

Uses that are located adjacent or have adjoining parking lot space may be permitted to share a parking lot. An easement shall be established for the shared parking arrangement and reviewed and approved as part of the site plan approval process.

Section 4. Phased parking

A multi-tenant facility may construct the minimum parking stalls required and show phased parking stalls to be added as occupancy and uses change in the multi-tenant building. The phased stalls shall be installed prior to need for such stalls.

Section 5. Off-Site Parking Lot

Sites that cannot meet the parking requirements on-site may locate parking lots on adjacent properties to meet parking requirements. Off-site parking lots shall be part of the site plan submittal and shall meet the bulk regulations and performance standards of this Ordinance.

Division 2. Parking Lot Design

Section 1. Parking Lot Design Standards

The following are minimum maintenance and parking lot design standards.

Section 2. Maintenance

All parking areas shall be paved and maintained to SUDAS standards.

Section 3. Off-Street Parking Design Standards

(A) A required off-street parking space shall be at least nine (9) feet in width and at least eighteen (18) feet in length, exclusive of access drives or aisles, ramps, columns, or office or work areas. The length of parking spaces can be reduced to sixteen and one-half (16.5) feet including wheel stop if additional space of one and one-half (1.5) feet in length is provided for the front overhang of the car. The parking space shall have a vertical clearance of at least seven (7) feet.

(B) Horizontal widths for parking rows, aisles, and stalls shall be provided at widths no less than listed in the following table 12.1:

Table 13.1 Parking Stall Standards

Angle of Stall	Width of Stall	Width of Aisle	Measurement of Stall Perpendicular to Aisle	Measurement of Stall Parallel to Aisle
Parallel	9.0’	12.0’	9.0’	23.0’
30°	9.0’	11.0’	17.3’	18.0’
45°	9.0’	13.0	19.8’	12.7’
60°	9.0’	18.0	21.0’	10.4’
90°	9.0’	24.0’	18.0’	9.0’

(1) **Access**. Each required off-street parking space shall open directly upon an aisle or driveway that is wide enough and designed to provide a safe and efficient means of vehicular access to the parking space. All off-street parking facilities shall be designed with an appropriate means of vehicular access to a street or alley, in a manner which causes the least interference with traffic movements.

(2) **Handicapped Parking**. Parking for the disabled shall be provided at a size, number, and location as specified by State and Federal and Local laws including but not limited to Iowa Code chapter 321L and the Americans with Disabilities Act.

Section 4. Off-Street Loading Standards

Any use with a gross floor area of six thousand (6,000) square feet or more, and requires deliveries or shipments, must provide off-street loading facilities in accordance with the requirements specified below.

(A) Every retail establishment, industrial or manufacturing use, warehouse, wholesale use, freight terminal, railroad yard, hospital, or related uses having an aggregate gross floor area of six thousand (6,000) square feet or more shall provide off-street loading facilities as follows:

Table 12.2 Non-Residential Loading requirements

Gross Floor Area in Square Feet	Number of Berths
6,000 – 24,999	1
25,000 – 79,999	2
80,000 – 127,999	3

For each additional seventy-two thousand (72,000) square feet (or fraction thereof) of gross floor area, one (1) additional berth shall be provided.

(B) Every public assembly use, such as auditoriums, convention halls, exhibition halls, stadiums or sports arenas, funeral homes, and restaurants and hotels with a gross floor area of greater than thirty thousand (30,000) square feet, shall provide off-street berths as follows:

Table 12.3 Public Assembly Loading Requirements

Gross Floor Area in Square Feet	Number of Berths
6,000 - 29,999	1
30,000 - 119,999	2
120,000 - 199,999	3

**For each additional one hundred and five thousand (100,000) square feet (or fraction thereof) of gross floor area, one (1) additional berth shall be provided.*

(C) One (1) loading berth shall be provided for the first six thousand (6,000) to one hundred thousand (100,000) square feet of office floor area with one (1) additional berth to be provided for each one hundred thousand (100,000) square feet of floor area.

(D) The minimum area for each off-street loading space, excluding area for maneuvering, shall be two hundred and fifty (250) square feet.

(E) At no time shall any part of a truck or van be allowed to extend into a public thoroughfare or the right-of-way while the truck or van is being loaded or unloaded.

(F) Paving is required for all off-street loading facilities.

Article 14. Street/ Road Standards and Access

Division 1. Street Classification

Table 14.1 Street Classifications

Federal Functional Classification System	=	Street/Road Reference
Interstate	=	Freeway/ Expressway
Other Principal Arterial	=	Major
Minor Arterial Major Collector Minor Collector	=	Minor
Local	=	Local

Division 2. Access Management

The following governs the standards for controlling access to specific roads.

Section 1. Access to public roads and highways in Polk County shall be limited to congestion created by turning movements. All developments shall meet the following standards:

(A) All proposed residential development shall take direct access only to local residential streets wherever possible.

(B) Individual detached single-family residences built under the single-family development option may take direct access to a minor arterial, minor collector or major collector street only if no other access options are viable.

(C) No more than two (2) residences are permitted onto a shared common driveway and access point. When installing a new access and driveway, it must be centered on the joint property line of the parcels wherever possible.

Section 2. All nonresidential uses must take primary access to a minor or major street or to a frontage road. Direct primary access to a local residential street is prohibited for nonresidential uses.

(A) All uses shall be discouraged from taking more than one (1) point of access. In instances where more than one (1) access point is required, the number shall be minimized by combining access points when possible.

(B) Uses on minor roads which have at least one hundred fifty (150) feet of frontage may have one (1) access. Uses which have less than one hundred fifty (150) feet of frontage shall have shared access points/easements. Non-residential uses with less than one hundred fifty (150) feet of frontage shall also provide linked parking areas or frontage roads access and circulation.

(C) Uses fronting on major roads shall take access at least three hundred (300) feet apart. Parallel access or reverse frontage roads shall be used to increase the distance

between intersections to six hundred and sixty (660) feet where possible.

Division 3. Temporary Access

A temporary access permit may be allowed which shall expire when the permanent access to the property via adjoining parking lots, parallel access, or reverse frontage roads becomes feasible. The property owners shall pay for the cost of closing the temporary access and connecting to the permanent access at the time the permanent access is completed.

Division 4. Road Construction Standards

Roads and their rights-of-way shall be constructed or repaired in accordance with the Polk County Subdivision Ordinance and SUDAS – Current Edition.

Division 5. Clear View of Intersecting Streets

In order to provide a clear view of intersecting streets to the motorist, there shall be a triangular area of clear vision formed by the two (2) intersecting streets. The size of the triangular area is a function of traffic volume and speed. Clear view distance requirements shall be shown in accordance with the current American Association of State Highway and Transportation Officials (AASHTO) standards.

Article 15. Construction Standard.

All developments, except conventional single-family and uses which have an average daily traffic count fewer than forty-nine (49) vehicles in the AG, AT, and OS Districts are required to pave their drives, parking, loading and display areas. Curbs and/or wheel stops are required in parking areas and curbs are required in paved drive areas. The approach, drive and parking areas for nonresidential uses shall meet a minimum thickness as identified in SUDUS – current edition. Conventional single-family development and uses which have an average daily traffic count fewer than forty-nine (49) vehicles in the AG, AT, and OS Districts are required to maintain a durable and dust free surface on drives and parking areas as approved by the Zoning Administrator. If the proposed use cannot adequately define the average daily traffic counts to be fewer than forty-nine (49) the Zoning Administrator is permitted to require paving and curbing.

Article 16. Site Plans

This Article sets forth requirements for site plans including the procedure for submittal, review and approval for nonresidential developments and planned residential developments.

Division 1. Site Plan Required

Prior to the development of any site for non-residential use permitted or conditional or planned residential uses, a site plan shall be submitted and shall conform to these requirements as outlined in this article.

Section 1. Major Site Plan

The owner or owners of record, or owners under contract of a lot or tract of land, or their authorized representative, shall, prior to the time of application for a Building Permit, submit five (5) copies of the site plan with the appropriate review fee as prescribed by the Board of Supervisors for review with the Zoning Administrator. The proposed site plan may be approved by the Zoning Administrator or designee upon concurrence of all appropriate agencies. The site plan shall follow the review process as set forth in Division 5 of this Article.

The site plan shall be drawn to scale not less than 1"=100', be legible and shall show the following information:

(A) General Matters

(1) A metes and bounds legal description of the property certified by a land surveyor or, if part of a recorded plat, the dimensions and plat reference including book/page of subdivision plat or survey.

(2) A vicinity map showing the subject parcel and illustrating its relationship to the nearest major street intersection and adjacent streets.

(3) North arrow and scale of drawings.

(4) Title block including the name and address of the development and the developer, the architect's/engineer's seal, the date, and the date of all revisions.

(5) Property lines, existing and proposed right-of-way lines, with metes and bounds (bearing and distances) indicated, and building or setback lines.

(6) Existing and proposed easement lines and dimensions, with the owner's name or a description of facilities located therein.

(7) Location and size of all existing and proposed structures and other improvements on the property, including, but not limited to, buildings, existing and proposed parking areas, streets, walkways, drainage structures, utility poles, fences, retaining walls, sewage disposal system, manholes, water lines, wells, etc.

(8) For nonresidential uses, a description of the general use for which any structure is intended.

(9) For nonresidential uses, the number of employees on the largest work shift; for places of assembly, the maximum capacity of the meeting or assembly space (if applicable.)

(10) Ownership, land-use, and zoning of adjoining properties.

(11) Submission of permits or other records, if required, proving that the proposed use is located on a legal lot.

(12) Design of all exterior signs, including location and size (both freestanding and attached signs) and illumination technique.

(13) Location and intensity, in candlepower, of all exterior lighting, including height and spacing of all lighting standards.

(14) Location of outside refuse collection areas and the type of solid screen (no slats) to be provided. Refuse containers must be enclosed from public view.

(B) General Notes

The following should be included as general notes on a site plan.

(1) Gross square footage of all building structures and Floor Area Ratio, if applicable.

(2) A table showing type, size and quantity of all trees and shrubs used in landscaping of the site if not noted elsewhere on the plan.

(3) Present zoning of the subject tract.

(4) Percentage of green space, Open Space Surface Ratio, per lot not occupied by buildings, structures, or paving.

(5) Add other general notes as determined during review process.

(C) Drainage Matters

(1) All existing or proposed ponds, lakes, basins, rivers, streams, or other bodies of water, and their intended purpose (recreational, retentive, etc.).

(2) Existing and/or proposed storm sewers to serve the site.

(3) Existing and proposed major drainage facilities, such as bridges, culverts, channels, creeks, etc.

(4) The limits of the one hundred (100) year floodplain zone (if applicable).

(D) Site Grading Matters

(1) Existing and proposed contours shall be referenced to LIDAR (Light Detection and Ranging) data or U.S. Geological Survey datum and normally two (2) foot intervals, for the subject property, extending at least fifty (50) feet off site. Contour intervals other than the above may be required depending on the topography of the site. Existing contour lines shall be differentiated from that of proposed contour lines. A varied frequency of contours and/or spot elevations may be required.

(2) If required to determine drainage patterns, two (2) cross sectional profiles (taken perpendicular to each other), showing proposed structures and proposed and existing grades through the center of the property may be required.

(E) Circulation, Parking, and Landscaping Matters

(1) The internal and peripheral vehicular circulation including:

(a) Curb cuts required to provide ingress and egress to and from adjacent streets.

(b) The existing width and proposed widening of all existing adjacent streets and rights-of-way (including the number and width of lanes and any island or medians) (NOTE: New easements and right-of-way dedications may be required in conjunction with the proposed development, and must be shown and dimensioned on the plan.)

(c) All the entrances on opposite sides of existing adjacent streets within the frontage of the development.

(d) The width and location of all internal drives, aisles, parking and loading spaces.

(e) The location of all islands and medians.

(f) The location and dimensions of all existing and proposed curbs.

(2) The number of parking and loading spaces.

(3) The location of spaces to be used for outdoor vehicular and equipment storage, and the location of screening, existing and proposed.

(4) All proposed deciduous and evergreen trees, ground cover, and other landscaping elements and the quantity, plant type and initial planting sizes.

(F) Wastewater System

(1) Public sanitary sewer main location including existing and proposed manholes, service line connection location and label the provider of the service if the project is adjacent to or within 300 feet of the property.

(2) Proposed location of on-site wastewater system and type of system and protection of area noted, if public sanitary sewer is not available.

(G) Proposed Activities

(1) Proposed location of buildings and other structures, including parking and loading areas.

(2) In multiple lot developments, conceptual location and configuration of buildings, approximate locations of common ground areas, open space, major utility easements, and storm water retention areas shall also be indicated.

(3) Preliminary plan for storm drainage facilities.

(4) Proposed land uses, lot areas and dimensions, building sizes and heights, and setback distances.

(5) Proposed landscaping, lighting, and screening plans.

(6) Proposed development phasing schedule.

(7) A color photograph and/or rendering of the proposed building(s) as viewed from the front of the lot at the street lot line, together with elevation views of the remaining

sides of the building(s), showing proposed building materials and appearance.

(H) Existing Natural Resources

(1) A natural resource inventory of the site showing all the natural resources as listed in Natural Resources section including woodlands, wetlands, drainageways, floodplain, etc.

(2) Show the approximate location of all isolated trees having a trunk diameter of sixteen (16) inches or more and all tree masses.

(I) Site Plan improvements completed and constructed as approved

All information shown on a site plan shall be constructed or completed to conform to the approved site plan. Modifications shall be shown on a revised certified as-built site plan. Additional engineering, site plan documents and site modifications may be necessary to comply with the requirements of this Ordinance if construction not completed to the approved site plan. Failure to complete the site plan as approved is a violation of this Ordinance.

Section 2. Minor Site Plan

A minor site plan may be filed for an addition to an existing non-residential building or expansion of a non-residential use which includes but not limited to the addition of paved surfaces or outdoor storage areas. A minor site plan may also be filed for a new non-residential use on a property where a change of use permit is required and for an unmanned utility substation. The proposed site plan may be approved by the Zoning Administrator or designee upon concurrence of all appropriate agencies. The site plan shall follow the review process as set forth in Division 5 of this Article. A major site plan may be required for the addition to the existing non-residential use if there is not an existing site plan on file that generally conforms to the major site plan requirements or the proposed developed area covers a majority of the lot or where the building has been or is to be demolished for redevelopment.

(A) Minor Site Plan Requirements

A minor site plan shall be drawn to a scale not less than 1"=100' and shall show the following information:

(1) A legal description of the property and boundary drawing of the property or area involved.

(2) A vicinity map showing the subject parcel and illustrating its relationship to the nearest major street intersection and adjacent streets.

(3) North arrow and scale of drawings.

(4) Title block including the name and address of the development, the architect's/engineer's seal, the date and the date of all revisions.

(5) Present titleholder of the property.

(6) Number of units, square feet and a description of the use proposed for the addition.

(7) Location of the vehicular entrance to the site.

(8) Method of handling and approximate location of water and sewer (septic) facilities

(9) Location of easements.

(10) Existing and proposed site improvements including but not limited to location, dimensions, height and setbacks of all buildings, paving, parking, storage areas, storm water facilities, signage, lighting, fencing, landscaping

(11) Location of existing and proposed parking areas, number of stalls required, and stall dimensions.

(12) Location of outside refuse collection areas and the type of solid screen to be provided. Refuse containers must be enclosed from public view.

(13) Location of landscaping, buffer areas and screening.

(14) Existing and proposed contours

(15) Storm water detention areas and calculations.

(16) The existing, proposed and maximum Floor Area Ratio (FAR) for the use.

(17) The existing, proposed and minimum Open Space Ratio (OSR) required for the

use.

(B) Site Plan improvements completed and constructed as approved

All information shown on a site plan shall be constructed or completed to conform to the approved site plan. Modifications shall be shown on a revised certified as-built site plan. Additional engineering, site plan documents and site modifications may be necessary to comply with the requirements of this Ordinance if construction not completed to the approved site plan. Failure to complete the site plan as approved is a violation of this Ordinance.

Section 3. Sketch Plan

A Sketch Plan is a scaled drawing that is not required to be certified due to the minimal change to an existing site. Sketch Plans are permitted only for Change of Use where no exterior site improvements are required other than possibly landscaping or parking lot striping. Also permitted for existing structures for Change of Use for commercial stables. Also permitted for public park structures (ie shelter house, bathroom, playgrounds), And also where modifications to an existing approved site plan on file with Polk County, where no additional hard surface is proposed (ie: building constructed on existing paved surface and adequate parking provided.)

(A) Sketch Plan Requirements

A sketch plan shall be drawn to a scale not less than 1"=100' and shall show the following information:

(1) A legal description of the property and boundary drawing of the property or area involved.

(2) A vicinity map showing the subject parcel and illustrating its relationship to the nearest major street intersection and adjacent streets.

(3) North arrow and scale of drawings.

(4) The name and address of the development,

(5) Present titleholder of the property.

(6) Use proposed for the site.

(7) Location of the vehicular entrance to the site.

(8) Method of handling and approximate location of water and sewer (septic) facilities

(9) Location, dimensions, height, and setbacks of all existing and proposed buildings.

(10) Location of existing and proposed parking areas, number of stalls required, and stall dimensions.

(11) Location of outside refuse collection areas and the type of solid screen to be provided. Refuse containers must be enclosed from public view.

(12) Location of landscaping, buffer areas and screening.

(B) Sketch Plan Review

The sketch plan will be reviewed. Modifications to the sketch plan may be requested by the County. If adequate the sketch plan will be approved. If sketch plan cannot adequately provide necessary detail or if existing site factors do not adequately provide appropriate drainage or detention a minor or major site plan as determined by the Zoning Administrator shall be submitted for the project.

Division 2. Processing a Site Plan Review Application

Section 1. Site Plan Review Process for Permitted and Conditional Uses

(A) Copies of the application shall be distributed to Building, Engineering, Air Quality and Environmental Health Divisions by the Planning Division. Des Moines Water Works will also be provided a copy for review. Other County departments or government agencies may be provided copies as determined to be necessary.

(B) The Zoning Administrator and other officials shall examine the plan as to its compliance with the laws and ordinances of the County. Said plan review should be completed within five (5) working days and shall be completed within fifteen (15) working days after receipt by the Zoning Administrator.

(C) If a subdivision is required, a plat of the subdivision, in lieu of a site plan, shall be filed in compliance with the requirements and time schedule in the Polk County Subdivision Ordinance. A site plan for the proposed development shall be completed after preliminary plat is approved. No building permits may be issued until the final plat is recorded.

(D) Following site plan review, the Zoning Administrator shall approve, approve with conditions, require the review comments to be addressed, or deny the site plan. The review comments shall set forth the recommendations for changes in the plans as submitted and the conditions for approval, if any, necessary to bring the plan into compliance with any applicable ordinance or regulation. Conditions for approval may also be designed to eliminate any adverse effects of the proposed development on those aspects of the general health, safety, and welfare of the community for which the official or consultant has special responsibility.

(E) If the finding of the Zoning Administrator is such that the plan does not meet the standards of this Ordinance, the Zoning Administrator may impose conditions regarding approval of the final development plan which it determines will adequately safeguard the standards set forth and such other conditions which it determines necessary to preserve property values and the public welfare.

(F) If the Zoning Administrator finds that any one of the standards of this Ordinance have not been satisfied and cannot be adequately provided for on the site, the Zoning Administrator shall deny the site plan.

(G) If the site plan is denied, the developer may resubmit a revised site plan for approval. Resubmission shall be within ninety (90) days of the date of denial of the site plan. The procedure for resubmission shall be the same as for submission of an original site development plan as set forth in this Division. After ninety (90) days, submittal shall be viewed as a new submittal and new fees shall be paid.

Section 2. Documents and Filing Requirements

Upon a finding of compliance with the authorizing ordinance, the Zoning Administrator or a designee shall file the approved site development plan with the Polk County Public Works Department and shall keep the site plans on record in the department. If the use for the site is Conditional, as determined by this Ordinance, a Conditional Use permit may be applied for and shall include the information required for Site Plan Review in accordance with this Ordinance.

Section 3. Expiration

(A) Site plans under review shall expire and a new submittal with application and fee is required for any site plan that is not resubmitted within 6 months of the most recent review.

(B) Approved site plans shall expire and a new submittal with application and fee is required for any site plan for which building permits have not been issued for the proposed improvements within 24 months of the site plan approval date

Section 4. Procedure for Amendment of Site Plan or Conditions

In order to amend the recorded approved site development plan, the procedure, subject to the same standards of review required for site development plan approval, shall be as follows:

(A) The property owner or authorized representative shall submit an amended site development plan together with a filing fee to the Zoning Administrator for review and recommendation. The Zoning Administrator shall then evaluate the request for consistency in purpose and content with the nature of the proposal as approved by the Zoning Administrator.

(B) If the Zoning Administrator determines that the proposed amendment to the site development plan is not significant, the Zoning Administrator should, within five (5) working days of receipt of the proposed amendment, approve, require changes or disapprove the amendment in accordance with the procedures set forth in this Division. If approved, the amended plan shall be recorded with the Polk County Public Works Department.

(C) If the Zoning Administrator determines that the proposed amendment to the site development plan is significant, the Zoning Administrator shall review the matter in accordance with the proceedings specified in this Article, prior to making a decision as to whether or not to approve the amendment. If approved, the amended plan shall be recorded with the Polk County Public Works Department.

Division 3. Standards for Site Plan Review

Section 1. Zoning Administrator Review

The Zoning Administrator shall examine all plans, documents, and exhibits pertaining to proposed structures for general conformity with the style and design of surrounding structures and to ensure that the project is conducive to the proper architectural development of the County. This development review will be based on information provided by the developer and will cover landscaping, lighting, architecture, setbacks, points of access and egress, screening, and location relationships of proposed building(s), improvements, phasing, and any other information which may include architectural models, samples of proposed exterior building materials, etc., as deemed appropriate by the Zoning Administrator. The conditions for approval shall also cover appropriate project timing relative to initiation and completion of all construction.

Section 2. Reasons for Denial

The Zoning Administrator shall not approve a site development plan which:

(A) Fails to meet the standards of this Ordinance; or

(B) Substantially increases traffic hazards or congestion due to the location or orientation of curb cuts or the layout of internal circulation; or

(C) Contains a layout of buildings, parking, roads, and utilities that substantially increase fire, health, or other public safety hazards; or

(D) Contains landscaping that is laid out so as to subvert the intended buffering and character value of screening uses from roads or neighbors; or

(E) Is laid out or designed such that it substantially increases storm water drainage or pollution.

Division 4. Owners Association

Section 1. When Association Required

(A) An Owner's Association shall be established to accept conveyance and maintain all open space, common areas and facilities within a development containing common areas.

(B) Developments that have common areas or facilities that are shared within the development shall be conveyed to an owner's association in which all owners of lots in the development shall be members.

(C) Owner's Association must be filed and registered with the Secretary of State in accordance to Chapter 504 Code of Iowa prior to the approval of the site plan.

Section 2. Requirements

(A) Common areas shall not be subsequently divided or conveyed by an Owner's Association except in compliance with this Ordinance and the Polk County Subdivision Ordinance.

(B) Common areas and structures shall be maintained in a manner that they will remain attractive and useful to the owners and tenants of property within such site and shall not be injurious to the health, safety, and welfare of residents of surrounding areas or be detrimental to property values of land and improvements within the site or in surrounding areas or in violation of any standard of this Ordinance.

Section 3. Approval by the Zoning Administrator

The Owners' Association shall be approved by the Zoning Administrator after review from the County Attorney' Office.

(A) Prior to approval of a site plan, the Developer shall submit a copy of the proposed By Laws of the Owner's Association containing covenants and restraints. These restrictions shall include but not be limited to:

(1) Membership in the Owner's Association for each original purchaser and each successive purchaser of a lot or unit.

(2) Provision for assimilation of new owners from subsequent sections of the development.

(3) The payment of premiums for liability insurance, local taxes and assessments.

(4) Power to levy assessments against the owners of lots or units in the development.

(5) Easement for access, ingress and egress from common areas to public right-of-way.

(6) Provision for common area maintenance, and restoration in the event of damage.

(7) Provision that owner's become individually liable for taxes and assessments of

the common areas in the event of default.

(8) Provision for an annual meeting of the association.

(9) The owners' association shall provide that the conveyance or change of ownership or lease of any part of such common area shall be subject to the terms of this Ordinance and Owners' Association.

(B) Upon recording a copy must be submitted and filed with the Zoning Administrator.

(C) After approval, any amendment of the By Laws that will affect Jurisdiction shall be resubmitted to the Zoning Administrator for review and approval.

Article 17. Rural Cluster Development Option Standards

Division 1. Rural Survey

A rural survey is permitted only in the AG, AT, and ER Districts that meets the cluster development option. A rural survey permits the subdividing of one large parcel into a somewhat smaller main parcel and additional parcel. Open space normally required on individual parcels shall be required on the remaining larger parcel, referred to as the residual parcel. The following requirements shall be met for all Rural Surveys:

(A) The additional parcel shall meet the survey requirements of Chapter 355 and shall not contain any public dedication (see figure 15.1).

(B) The Rural Survey divisions must meet the Plat of Survey requirements of the Polk County Subdivision Ordinance.

(C) The Rural Survey divisions that cannot meet the Plat of Survey requirements of the Polk County Subdivision Ordinance may be completed as a subdivision plat as allowed by the Subdivision Ordinance.

Section 1. Residential Rural Survey Requirements

The following requirements shall be met for Residential Rural Surveys:

(A) The residual parcel of the property is indicated on the plat of survey in sketch fashion using Congressional Land Survey descriptions. This residual parcel shall be identified on the survey as “residual parcel” in the survey.

(B) The total development potential and minimum open space requirements shall be calculated for the entire property.

(C) The remaining number of permitted dwelling units (total development potential minus the individual parcel of the rural survey) shall be noted on the plat of survey.

(D) The total minimum open space requirement shall be noted on the plat of survey.

(E) On the plat of survey, these notes shall be located within the boundaries of the residual parcel, and shall read as follows:

(1) The remaining development on the residual parcel of this survey may consist of no more than ____ dwelling unit(s). A minimum of ____ acres of the residual parcel shall be maintained as permanent open space. As parcel____ of this survey was recorded as a rural survey and was thus exempted from providing the required open space within its boundaries.

(2) As the owner(s of all land in this survey, I hereby agree to a restriction of the development potential on the residual parcel as indicated in the note shown on the residual parcel.

Signed: _____ Date:_____

An example of a Residential Rural Survey is shown on figure 15.1

Figure 15.1 Residential Rural Survey

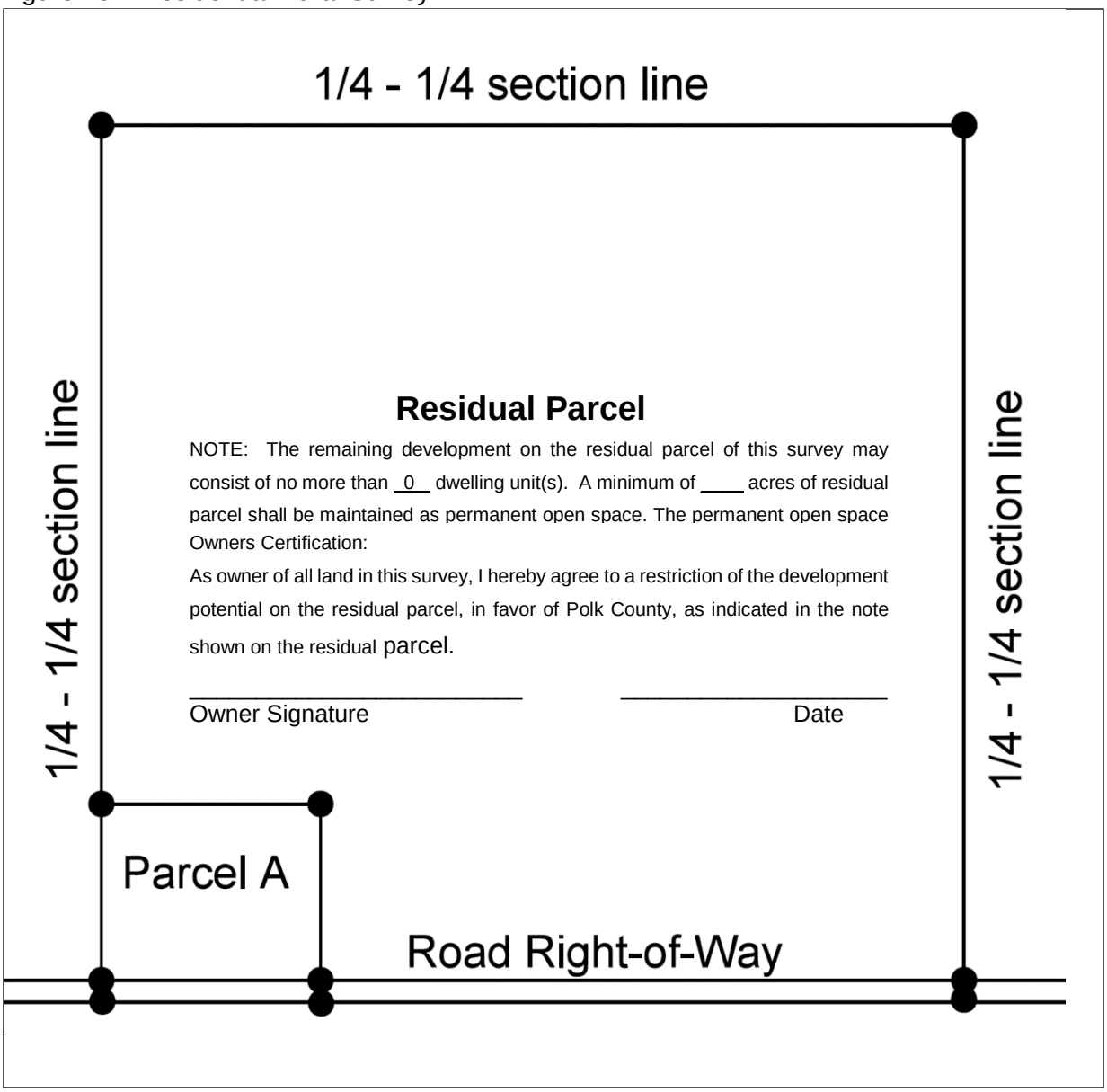

Section 2. Non-Residential Rural Survey Requirements

The following requirements shall be met for Non-Residential Rural Surveys:

(A) The total development potential and minimum open space requirements shall be calculated for the entire property.

(B) The developed parcel shall include a minimum of 40 feet of frontage where any access is taken onto a public street.

(C) A minimum of 35% of the developed parcel shall be open space.

(D) The developed parcel shall provide area for all site development components including, parking, drive, display areas, private utilities and storm water detention facilities.

(E) The remaining amount of buildable area (total development potential minus the individual parcel of the rural survey) shall be noted on the plat of survey.

(F) The total minimum open space requirement shall be noted on the plat of survey.

(G) On the plat of survey, the following notes shall be located within the boundaries of the residual parcel, and shall read as follows:

(1) The remaining development on the residual parcel of this survey shall be for Open Space use only as provided for in Table 4.2 (Uses in Open Space) of the Polk County Zoning Ordinance. The (insert use) _use may consist of no more than ____ square feet of developed area. The remaining ____ acres __ ____ (square feet) of the residual parcel shall be maintained as permanent open space. As parcel____ of this survey was recorded as a rural survey and was thus exempted from providing the required open space, except for_____ acres _____(square feet) within its boundaries

(2) As the owner(s of all land in this survey, I hereby agree to a restriction of the development potential on the residual parcel as indicated in the note shown on the residual parcel.

Signed: _____ Date:_____

Section 3. Approval

The Rural survey once approved will be signed by the Zoning Administrator. The Rural Survey shall be recorded with the Polk County Recorder within 30 days of the date on the survey, so that future owners will have a record of the survey's existence. If the survey is not recorded within 30 days, the rural survey must be resubmitted with new signatures and dates.

Article 18. Ordinance Amendment Procedures

Division 1. Purpose

All applications for rezoning of land through a map amendment or amending the text of the Zoning Ordinance shall follow the provisions of this Article.

Section 1. Text Amendment

The approval of text amendments by the Board of Supervisors shall be preceded by findings that such a change is needed for one of the following reasons and meets the required tests.

(A) The use desired is not covered in the text of the Ordinance, but is acceptable because:

(1) The proposed use is in accordance with the purpose of the zoning district; and

(2) There are similar uses in the district; and

(3) The intensity of use proposed is consistent with other uses in the district. In demonstrating consistency, the building volume ratios, site volume ratios, and landscape volume ratios of the proposed use and existing uses in the area shall be compared. The Board of Supervisors, upon the recommendation of the Zoning Commission, may adjust the intensity, landscaping, and other criteria to ensure that consistency is maintained.

(B) New conditions have arisen that have not been addressed in the Ordinance. These new conditions may be any one of the following:

(1) The Comprehensive Plan has been amended and the Zoning Ordinance needs to be brought into conformity with the Plan.

(2) A changing market or other conditions require new forms of development or new procedures to meet changing needs.

(3) New methods of development or providing infrastructure makes it necessary to alter the Ordinance to accommodate these new methods.

(4) Changing governmental finances requires amending the text of the Ordinance to be in keeping with the needs of government to provide and afford new public services.

(C) After experience with the regulations, adjustments are needed to achieve the desired objectives. This request must come from County staff who have recognized problems that need to be corrected or from developers and others who have experienced trouble making the regulations work properly.

Section 2. Map Amendment

The Board of Supervisors may, by resolution on its own action, or by petition after recommendation by the Zoning Commission, approve map amendments. An approval shall be preceded both by public hearings, as provided herein, and by findings that such a change is needed for one of the following reasons:

(A) The Comprehensive Plan has been amended and the Zoning Map needs to be brought into conformance with the revised Plan.

(B) A mistake was made in the original map. That is to say, an area is, and has been, developing in a manner and purpose different from that for which it was mapped. Since the County may have intended to stop an undesirable land use pattern from spreading, it must be demonstrated that the circumstance is not intentional.

(C) Changing conditions, such as new roads or utility lines, makes another location more favorable for development than the location originally planned.

(D) Growth rates have changed, thereby increasing the need for development in the County.

Division 2. Procedure for Text and/or Map Amendment

Section 1. General

(A) Whenever the public necessity, convenience, general welfare, or good zoning practice require, the Board of Supervisors may, after recommendation by the County Zoning Commission and subject to the procedure set forth in this Article, pass an ordinance to amend, supplement, or change the regulations, district boundaries, or classifications of property now or hereafter established by this Ordinance or amendments thereof.

(B) Such amendment, supplement, or change may be initiated by a resolution of the Board of Supervisors, by motion of the Zoning Commission, or by petition of any property owner or contract purchaser addressed to the Board of Supervisors.

(C) The Board of Supervisors hereby expresses recognition of the fact that sections of Polk County are changing from a rural to a residential, commercial, industrial, or other character, and have in the Polk 2030 Polk County Comprehensive Plan anticipated and sought to direct such growth along desirable lines until the year 2030. It is inevitable that no such plan can be perfect or everlastingly valid.

The Supervisors, therefore, anticipate that the said Land Use Plan will need to be amended at least every five (5) to ten (10) years from the date of adoption or subsequent comprehensive amendments thereto, as contemplated and authorized by the Code of Iowa, and that the Zoning Map must also be comprehensively amended from time to time in order that it may continue to be in conformity with such Comprehensive Plan, as required by the Code of Iowa.

Section 2. Applications

(A) Applications for any change, either of district boundaries or classification of property as shown on the Zoning Maps, shall be submitted to the County Zoning Commission at its public office.

(B) Applications shall be on such forms, and shall be accompanied by such data and information, as may be prescribed for that purpose by the Zoning Commission, so as to assure the fullest practicable presentation of facts for the permanent record.

(C) Each zoning change application shall be verified by the owner(s) of the property within the area proposed to be reclassified, attesting to the truth and correctness of all facts and information presented with the application.

(D) Applications for either amendments of the text or requirements of this Ordinance, shall likewise be submitted to the County Zoning Commission on forms prescribed by it and shall be verified by the person or persons preparing said amendment.

(E) Applications for either rezoning or text amendments shall not be withdrawn from consideration by the Zoning Commission after public notice has been given.

Section 3. Fees

(A) Each application for an amendment or change to the District Zoning Map, except those initiated by the Zoning Commission, shall be accompanied by either a check payable to Polk County or a cash payment, in the required amount, as set by the Board of Supervisors.

(B) This fee is to cover the approximate procedural costs of the application; under no condition shall the fee, or any part thereof, be refunded for failure of said amendment or change to be enacted into law.

Section 4. Zoning Commission Public Hearing and Recommendations

(A) Before submitting recommendations on proposed amendments to the Board of Supervisors, the Zoning Commission shall hold at least one (1) public hearing thereon. Notice of the hearing on map amendments shall be given to all property owners within five hundred (500) feet of the property concerned by placing said notice in the United States mail at least fifteen (15) days before the date of the hearing. The notice shall state the place and times at which the proposed map amendment may be examined.

(B) Proposed Text and/or Map Amendments shall be given one (1) publication in a newspaper of general circulation in the county not less than four (4) or more than twenty (20) days prior to the date of such hearing. This publication shall state the place and times at which the proposed Text and/or Map amendments to the Ordinance may be examined.

(C) When the Zoning Commission has completed its recommendations on a proposed amendment, it shall submit a report to the Board of Supervisors of the recommendation made.

Section 5. Board of Supervisors Public Hearing

(A) After receiving the Zoning Commission's recommendations on a proposed amendment, but before adoption of such amendment, the Board of Supervisors shall hold a public hearing thereon. Notice of the time and place of the public hearing shall be given not less than four (4) or more than twenty (20) days prior to that date and the notice shall be given one (1) publication in a newspaper of general circulation in the County. In addition, notices shall be sent by the United States mail, as specified in Section 4 above.

(B) Neither an application for map or text amendment nor the recommendations of the Zoning Commission shall be withdrawn from consideration of the Board of Supervisors after notice has been given as required by this Subsection.

Section 6. Decision

(A) After holding the public hearing provided for, the Board of Supervisors shall consider the Planning Commission's recommendations and vote on the adoption of the proposed amendment.

(B) The proposed amendment shall become effective with a favorable vote by a majority of the members of the Board of Supervisors.

Section 7. Failure to Notify

(A) Failure to notify, as provided in Sections 4 and 5, shall not invalidate a recommendation of the Zoning Commission or the decision of the Board of Supervisors.

(B) The intention of these Subsections is to provide, as well as possible, due notice to persons substantially interested in a proposed change, that an application to make a change is pending before either the Zoning Commission or the Board of Supervisors.

Section 8. Repeat Applications

(A) Whenever any petition for an amendment, supplement, or change of the zoning regulations herein contained (or subsequently established) has been denied by the Board of Supervisors, no new petition covering the same property and additional property can be filed with, or considered by, the Board of Supervisors until one year has elapsed from the date of the filing of a previous petition (See State Code Section language).

Article 19. Variance

Division 1. Procedure

Section 1. Applications

An application for a variance may be taken by the Zoning Administrator, from any property owner or registered agent or any person with notarized consent of the property owner. Such application shall be filed with the Zoning Administrator.

Section 2. Filing

(A) The Zoning Administrator shall inform an applicant, or interested party, in writing of the procedure to apply for a variance.

(B) The applicant shall complete the required forms, providing all information requested by the form, and any additional information that is reasonably necessary as requested by the Zoning Administrator or by this Division.

Section 3. Fees

Each application for a variance from the Zoning Ordinance shall be accompanied by a fee payment, as set by the Board of Supervisors, to cover the cost of the procedure.

Section 4. Processing a Filing

(A) The Zoning Administrator shall receive the application; incomplete applications will be returned and not processed until completed.

(B) The Zoning Administrator shall prepare a report of the case.

(C) At least fifteen (15) days notice, by mail, prior to the meeting date, to all parties of interest (property owners of record within two hundred fifty (250) feet of applicant's lot lines) of the time, place, and purpose of the public meeting.

(D) The Zoning Administrator shall transmit the completed application form, along with the case report and any other documents on the matter, to the Board of Adjustment.

Section 5. Meetings

(A) The Board of Adjustment shall hold a public hearing as provided in this Article. The Board of Adjustment shall set a reasonable time for the hearing of an application for a variance and shall give the following notices:

(B) At the meeting, any person may appear or be represented by agent or attorney and present oral or documentary evidence.

Section 6. Stay of Proceedings

An application for a variance shall stay all proceedings furthering enforcement of any Sections of the Zoning Ordinance from which the applicant is requesting a variance. Proceedings shall not be stayed, however, if the Zoning Administrator certifies to the Board of Adjustment that a stay would cause imminent peril to life or property. The Zoning Administrator’s certification shall state the facts and reasoning behind the Administrator's opinion. In this case, proceedings

shall not be stayed otherwise than by a restraining order which may be granted by the Board of Adjustment or by a court of record, on application, after notice to the Zoning Administrator and on due cause shown.

Section 7. Repeated Applications.

If an application is disapproved by the Board of Adjustment, thereafter the Board of Adjustment shall not be required to consider another application for substantially the same proposal, on the same premises, until after one (1) year from the date of such disapproval. If an appeal to the Board of Adjustment is appropriate and the notices mailed, and thereafter the applicant withdraws the application, the applicant shall be precluded from filing another application for substantially the same proposal on the same premises for six (6) months.

Section 8. Final Decision by the Board of Adjustment.

The Board of Adjustment may grant the variance in whole or in part, may attach conditions, modify, or reverse. If the Board attaches conditions, modifies, or reverses, it shall do so only where the record of the hearing indicates that the proposed order is not in conformance with the evidence presented and the Ordinance.

Division 2. General Standards

Section 1. General

Where by reason of the exceptional narrowness, shallowness, or unusual shape of a specific piece of property on the effective date of this Ordinance, or by reason of exceptional topographic conditions or other extraordinary situation or special condition of such piece of property in question, the literal enforcement of the requirements of this Ordinance would make it exceptionally difficult, if not impossible, to comply with the exact provisions of this Ordinance and would cause unwarranted hardship and injustice, unnecessary to carry out the purpose and intent of this Ordinance, the Board of Adjustment shall have the power upon appeal in specific cases, filed as provided in this Ordinance to authorize such variance from the terms of this Ordinance as will not be contrary to the public interest and will relieve such hardship, so that the purpose and intent of this Ordinance shall be observed and substantial justice done. In authorizing a variance, the Board of Adjustment may attach thereto such conditions regarding the location, character, and other features of the proposed structure or use as it may deem necessary in the interest of furthering the purposes of this Ordinance and in the public interest. In authorizing a variance, with attached conditions, the Board of Adjustment shall require such evidence and guarantee or bond as it may deem necessary to ensure compliance with the attached conditions.

(A) No variance from the provisions or requirements of this Ordinance shall be authorized by the Board of Adjustment unless the Board finds that the following facts and conditions exist:

(1) There must be exceptional or extraordinary circumstances or special conditions applying to the property in question, and do not exist generally on other properties in the same zoning district. By virtue of the unique or special conditions, it is, therefore, exceptionally difficult to place a use permitted in said district on the property.

(2) The variance is necessary for the preservation and enjoyment of substantial

property rights possessed by other properties in the same zoning district and in the same vicinity and such variances will not permit uses that are prohibited in that district.

(3) The authorization of such variance will not be of substantial detriment to adjacent property and will not be contrary to the purpose of this Ordinance and the public interest.

(4) That the special conditions or circumstances did not result from the actions of the applicant.

(5) The variance will not entirely void the natural resource protection requirements of this Ordinance.

(B) The condition and/or situation of a property for which a variance is sought must be of an unusual nature. A variance shall not be authorized if the condition or situation is of a general or recurrent nature such that adopting a general regulation as an amendment to this Ordinance is a reasonably practicable solution.

(C) The variance granted shall be the minimum necessary to permit a use of the property. A variance shall neither increase the number of permitted dwelling units by more than one (1), nor allow the minimum lot area required for a use to be decreased by more than ten (10) percent. If natural resources are involved, then mitigation for any damage to the environment shall be a condition of the variation.

Section 2. Limited Effect of a Variance

Where the Board of Adjustment approves a variance application or appeal under these regulations, such approval shall neither change the use classification of the building or premises, nor give it any status as a nonconforming use other than that which it may already have had. Granting of a variance shall neither qualify any adjacent property for any special treatment such as a variance, nor shall there be another substantial change or use without approval of the Board of Adjustment.

Section 3. Scope of Granting a Variance

The ability to grant relief with a variance is limited. The Board of Adjustment does not have the authority to grant a change in zoning by permitting uses that are not permitted in the district, or by altering the maximum intensities of the district, except as permitted in this Section. The Board of Adjustment does not have the power to rule on a contention that the Ordinance provisions represent a taking or deprive a landowner of all beneficial use of a property.

Article 20. Issuance of Permits and Licenses

All departments, officials, and public employees of Polk County that are vested with the duty or authority to issue permits or licenses shall conform to the provisions of this Ordinance and shall not issue a permit or license for any use, building, or purpose if the same would be in conflict with provisions of this Ordinance. All Building Permits and Certificates of Occupancy shall be revocable, subject to the continued compliance with all requirements and conditions of this and other applicable laws and regulations. Any permit or license issued in conflict with the provisions of this Ordinance shall be null and void.

Division 1. Building Permits

It shall be unlawful to locate, erect, or begin the construction, reconstruction, extension, conversion, or structural alteration of any building or structure, or to begin the excavation therefore or the construction of a well or sewage disposal system, other than the reconstruction, placement, or extension of any existing well or sewage disposal system, without first applying for a Building Permit thereof. Likewise, it shall be unlawful to use or permit the use of any building or land or part thereof, hereafter created, erected, constructed, reconstructed, extended, converted, or structurally altered, wholly or partly, or to change the use or permit the change of use of any building, structure, or land, until a permit has been issued by the Zoning Administrator.

Section 1. Application

Application for a Building Permit shall be made by the landowner, contract purchaser, or their attorney or agent to the Zoning Administrator or a designee. Every application for a Building Permit shall be accompanied by a drawing approximately to scale, the size and location on the lot of every existing building and structure, the location, outlines and dimensions of the proposed building or structure and its driveways, the existing and intended use of the premises and of each building or part thereof, and such other information with regard to the lot and its neighboring lots, buildings and uses, as may be necessary to determine and provide for the administration and enforcement of this Ordinance.

Section 2. Issuing a Building Permit

The issuance of a Building Permit shall show that the building or other structure or part thereof and the proposed use thereof, or the proposed use of the land or premises, conform with the provisions of this Ordinance. It shall be the duty of the Zoning Administrator or a designee to issue such Building Permit, if found to the Zoning Administrator's satisfaction that the building, structure, premises, and proposed use thereof conform with all the requirements herein set forth. No such Permit shall be issued until:

(A) All necessary approvals have been issued by:

(1) Environmental Health has approved the proposed well water supply, if applicable and on-site waste disposal facilities, if applicable; and

(2) The Public Works Department or District Engineer of the Iowa Department of Transportation as the case may be, approve the location and design of any driveways and drainage structures that are to connect with any public roads under their respective jurisdictions; and

(3) Relative to any new nonresidential development, cluster subdivision, planned development, or other subdivision or form of development, the necessary site plans and plats of subdivision have been fully approved.

Section 3. Guarantee of Improvements

Unless otherwise provided for in the conditions of the Ordinance governing an approved development, no Building Permits, or permits authorizing the occupancy or use of a building, facility, commercial establishment, or service concern shall be issued until required related off-site or on-site improvements are constructed or a performance bond, escrow, or other acceptable instrument approved as to form by the County Attorney is posted guaranteeing the improvements. Building Permits or other authorizations may be issued by the Zoning Administrator or a designee to permit the completion of required related off-site improvements pursuant to this Ordinance. Required related off-site improvements may include, but not be limited to, streets, sidewalks, sanitary and storm sewers, streetlights, and street trees.

Section 4. Commencement of Construction

No work shall be commenced before the issuance of a Building Permit thereof, showing that application has been made for a Building Permit and that the building or part thereof and the proposed use thereof conform with the provisions of this Ordinance.

No construction work shall be started before the lot and the location thereon of the projected building or other improvements have been staked out on the ground for inspection by the Jurisdiction.

Section 5. Expiration

A Building Permit issued in accordance with the provisions of this Ordinance shall become void six (6) months after the date of its issuance, if the building project for which it was issued has not been started. If work has started the permit shall be valid for one (1) year from date of issuance. If started but work ceases for more than six (6) consecutive months then the permit shall be void.

Section 6. Fees

A filing fee shall accompany each application for a Building Permit, in such amount as may be determined by the Board of Supervisors.

Division 2. Certificate of Occupancy

No person shall use or permit the use of any structure or premises or part thereof hereafter created, erected, changed, converted, enlarged or moved, wholly or partly, until a Certificate of Occupancy shall have been issued by the Zoning Administrator. Such certificate shall show that the structure or use, or both, or the premises, or the affected part thereof, are in conformity with the provisions of this Zoning Ordinance. It shall be the duty of the Zoning Administrator to issue such certificate if they find that all of the provisions of this Zoning Ordinance have been met, and to withhold such certificate unless all requirements of the Zoning Ordinance have not been met. Certificate of Occupancy shall also include Certificate of Use and Change of Use.

Section 1. Exceptions

No Certificate of Occupancy shall be required for recurring maintenance work, or for the installation of required improvements according to an approved subdivision plat.

Section 2. Temporary Certificates of Occupancy

A temporary Certificate of Occupancy may be issued by the Zoning Administrator for a period not to exceed six (6) months pending its completion in accordance with general rules or regulations concerning such temporary certificate and with such additional conditions or safeguards as are necessary in the circumstances of the case to protect the safety of the general public.

(A) Incomplete or changed items not shown on the site plan must be resubmitted on an updated site plan showing the modifications made. The updated site plan is subject to review and approval as outlined by this Ordinance prior to the Certificate of Occupancy.

(B) Temporary Certificate of Occupancy Agreement signed by the owner or representative is required prior to the issuance of the temporary Certificate of Occupancy.

Section 3. Structures and Uses As Provided In Building Permits, Plans and Certificates of Occupancy

Certificates of Occupancy issued on the basis of plans and applications approved by the Zoning Administrator authorize only the use, arrangement and construction set forth in such permits, plans and certificates, and no other. If the use, arrangement or construction is different than authorized, it shall be deemed a violation of this Zoning Ordinance.

Section 4. Certificate of Occupancy/ Change of Use for Existing Uses or Structures

Upon application from the owner or tenant, and upon inspection to determine the facts in the case, the Zoning Administrator shall issue a Certificate of Occupancy/ Change of Use for any building, premises or use, certifying that the building, premises or use is in conformity with the provisions of this Zoning Ordinance or that a legal non-conformity exists as specified in the certificate.

Section 5. Applications

Applications shall be made in writing by the owner of the property or with consent of the owner of the property for which the request is sought. Applications shall be made on forms provided by the Jurisdiction for Certificate of Occupancy. No application shall be accepted by the Zoning Administrator until it is complete as described above and until all fees established by Polk County for processing same have been paid in full. Information required shall include:

(A) The proposed use of the property/structure.

(B) The legal descriptions of the lot(s) for which the request is sought.

(C) A map (or maps) of the subject property showing:

(1) The property's boundaries; and

(2) The property's total acreage; and

(3) The location, width, and name of all existing or previously platted streets, railroad, and utility rights-of-way; and other permanent easements; and

(D) A detailed statement of the proposed use of each lot or structure, together with a sketch plan of the layout of the proposed existing and proposed improvements of the property, drawn to scale. The following information shall be provided:

(1) Location and exterior dimensions of all existing and proposed buildings and uses in relation to parcel and street lines.

(2) Location or plan for treatment and disposal of sewage and industrial wastes, waste supply, and storm drainage.

(3) A site capacity calculation in conformance with Density Standards.

(4) An open space plan showing the location, dimensions, and arrangements of all open spaces, yards, and bufferyards, including specification of all plant materials to be used in the bufferyards and landscaping required by this Ordinance, and including the specification of any use planned for open space or bufferyard areas.

(5) The location, height, and composition material of all walls, fences, or other structures to be utilized in providing the bufferyards required by this Ordinance; and

(6) The location and dimension of all existing and proposed vehicular drives, entrances, exits, traffic-circulation patterns, acceleration and deceleration lanes.

(7) The location, size, arrangement, and capacity of all areas to be used for off-street parking and off-street loading.

(8) The location, size, height, composition material, illumination, and orientation of all signs.

(9) Any other information deemed necessary by the Zoning Administrator to determine the compliance of the request with the terms of this Ordinance.

(10) If the application relates to property scheduled for phased development, the proposed layout of the total projected development shall be indicated and each phase's projected scope and time period indicated to the extent possible.

Section 6. Procedures for a Certificate of Occupancy

(A) Developments consisting of a single lot of record or a single dwelling unit or a single nonresidential unit shall be reviewed for compliance with this Ordinance, and within ten (10) days after the application has been accepted, the Zoning Administrator shall inform the applicant whether the application for Certificate of Occupancy has been granted. Development consisting of more lots, uses, or structures than described above shall be reviewed for compliance with this Ordinance in as timely a manner as possible. The Zoning Administrator shall inform the applicant whether the application has been granted within thirty (30) days after the application for Certificate of Occupancy has been accepted by the Zoning Administrator.

(B) In any case, where the application is granted, the Zoning Administrator shall issue a Certificate of Occupancy only after an inspection of the site has been completed by the necessary building, health, engineering and zoning representatives.

(C) In any case, where an application is denied, the Zoning Administrator shall state the specific reasons and shall cite the specific chapters, articles, divisions, and sections of this Ordinance upon which denial is based. If relief of such denial would be available by special permit or variance, the Zoning Administrator shall so state and shall refer the applicant to the appropriate sections of this Ordinance.

Article 21. Legal Lots of Record and Nonconforming

Division 1. Legal Lots of Record

In any district in which single-family dwellings are permitted, a single-family dwelling and customary accessory buildings may be erected on any lot(s) of record legally established prior to the effective date of adoption of Zoning Ordinance September 10, 2007. This provision shall apply even though such lot fails to meet the requirements for area or lot width, or both, that are applicable in the district; provided, that other requirements including setbacks, access, floodplain, sanitary sewer facilities and water requirements are met. Any Legal Lot of Record which is to be served by a septic system and/or individual well shall be of a size and design to meet the minimum requirements of the Board of Health regulations for such septic systems and/or wells.

Section 1. *Setbacks*

Legal Lots of Record shall conform to the Standard Single Family Regulations for setbacks found in Table 6.1 with the following exceptions:

(A) Subdivisions previously recorded as Planned Area Developments shall conform to the setbacks on the approved development plan.

(B) Subdivisions previously recorded using nonstandard Development Option under previous Zoning Ordinance (Cluster or Equestrian) shall conform to the setbacks on the approved final plat, if setbacks are not on the plat, the property shall conform to current Standard Single Family Regulations for setbacks except in AG and AT the property shall conform to the current Cluster Development Option Single Family Regulations

Section 2. Divisions Permitted

Legal Lots of Record in the AG, AT and ER Districts that currently are buildable parcels that do not meet the minimum district standards may be reconfigured with adjacent properties as long as the number of buildable parcels permitted is not increased. This limits the subdividing of parcels to the same or fewer number of buildable lots as would be currently buildable to properties prior to being reconfigured. Open space is required within these types of land divisions to protect natural resources and preserve the goals and objectives of the Polk County Comprehensive Plan and Zoning Ordinance.

(A) The process (Plat of Survey, Minor or Major Subdivision Plat) to reconfigure will be determined by the Polk County Subdivision Ordinance requirements.)

(1) Notes shall be added to subdivision ordinance documents that identify Article 19. Division 1 Legal Lots of Record.

(2) A development restriction note is required for the open space within a proposed lot or parcel or within common outlot(s) stating that no further division or building is permitted and the identified open space area is to remain according to the Zoning District Requirements, except for boundary line adjustments.

(3) The proposed lot configuration shall not create lot sizes that are less than the Cluster Development Option - Single Family Regulations for minimum bulk regulations as found in Table 6.1 for the zoning district that the parcel is located within.

(4) Each subdivision plat shall provide open space on the entire portion of the lot larger than 40,000 square feet, except for boundary line adjustments. (Existing Platted lots do not need to provide open space.)

(5) In AG and AT Districts if the existing parcel is a Legal Lot of record, the parcel may be divided using the cluster option but only with a subdivision to create a Lot 1 and Outlot.

(B) A parcel that currently meets the Zoning district minimum bulk regulations for lot size shall not be reduced in a subdivision with an adjacent undersized Legal Lot of Record, unless the parcel could otherwise be created using the cluster development option and provide the necessary open space.

Division 2. Nonconforming

Section 1. Intent

There exist within the districts established by this code and subsequent amendments lots, structures, and uses of land and structures that were lawful before this code was passed or amended that would be prohibited, regulated or restricted under the terms of this code or future amendments. It is the intent of this code to permit legal nonconforming lots, structures or uses to continue until they are removed so long as it remains otherwise lawful. All nonconforming uses shall be encouraged to convert to conformity wherever possible.

Section 2. Legal nonconforming use

For the purposes of this section, "use" means the principal purpose for which land or a building is being occupied. A use will be presumed legally nonconforming if it can be demonstrated by clear and convincing evidence that under a previous County Zoning Ordinance or prior to 1959, the use was established, converted, or enlarged and occupied. The burden of proof shall be on the property owner.

Section 3. Nonconforming structures with conforming uses

Nonconforming structures with conforming uses are subject to the following provisions:

(A) A nonconforming structure may continue. A nonconforming structure may be enlarged or altered so long as such enlargement or alteration does not increase its nonconformity.

(B) When a nonconforming structure is destroyed by any means to an extent of more than sixty (60) percent of its replacement cost, exclusive of the foundation, at the time of destruction, it shall not be reconstructed except in conformity with the provisions of this code.

(C) When a nonconforming structure is moved for any reason for any distance whatever, it shall thereafter conform to the regulations for the district in which it is located after it is moved.

(D) A Nonconforming residential units and/or accessory structures built prior to 1959, when the Zoning Ordinance went into effect, that were constructed too close to the property line may be expanded providing that the yard requirement in question is not reduced from its existing distance.

(E) Accessory buildings may be added so long as they conform in all respects to the requirements of the accessory buildings regulations of this Ordinance and not exceed 1008 square feet.

Section 4. Nonconforming uses of land.

Nonconforming uses of land are subject to the following provisions:

(A) A nonconforming use may continue.

(B) A nonconforming use shall not be enlarged to a greater height nor extended to occupy a greater area of land than was occupied at the effective date of adoption or amendment of this code.

(C) A nonconforming use shall not be moved in whole or in part to any other portion of the lot.

(D) If such nonconforming use of land ceases for any reason for a period of one hundred eighty (180) days or more, any subsequent use of such land shall conform to the regulations specified by this code for the district in which such land is located.

(E) Any land on which a nonconforming use is superseded by a permitted use shall thereafter conform to the regulation for the district in which such land is located and the nonconforming use may not thereafter be resumed.

Section 5. Nonconforming uses of structures, or structures and land in combination.

Nonconforming uses of structures, or structures and land in combination, are subject to the following regulations:

(A) A nonconforming use may continue.

(B) A nonconforming use may be changed to a use permitted in the district in which it is located.

(C) A structure containing a nonconforming use shall not be moved to another location on its lot.

(D) When a nonconforming use is discontinued or ceases to exist for a continuous period of three hundred sixty-five (365) days, the building, or building and land in combination, shall thereafter be used in conformance with the regulations of the district in which it is located.

(E) When a building containing a nonconforming use is destroyed by any means to an extent of more than sixty (60) percent of its replacement cost, exclusive of the foundation, at the time of the destruction, it shall not be reconstructed except in conformity with the provisions of this code.

(F) On a building devoted in whole or in part to any nonconforming use, work may be done on ordinary repairs, or on repair of walls, roofs, fixtures, wiring, or plumbing, provided that the square footage of the building as it existed at the time of adoption or amendment of this code shall not be increased.

(G) Where nonconforming use status applies to a building and land in combination, removal or destruction of the building shall eliminate the nonconforming status of the land.

(H) Off-street parking lots may be repaired or reconstructed on the site of a nonconforming use, not expanded upon.

(I) Nonconforming Single Family residential uses may be enlarged, extended, reconstructed or altered up to twenty (20) percent of the square footage of the dwelling unit.

(J) Nonconforming extraction or disposal uses may not be expanded in any manner. A nonconforming use may not be changed to an extraction or disposal use. A nonconforming

extraction use may not be changed to a nonconforming disposal use or vice versa.

Section 6. Strengthening unsafe structures.

Nothing in this code shall be deemed to prevent the strengthening or restoring to a safe condition of any structure or part thereof declared to be unsafe by any official charged with protecting the public safety upon order of such official.

Section 7. Change of ownership.

There may be a change of ownership or management of any existing nonconforming uses of land, structures, and premises and nonconforming structures with conforming uses provided there is no change in the nature or character of such nonconforming use or structure.

Section 8. Accessory Use, Structure, Sign

No use, structure, or sign which is accessory to a principal nonconforming use or structure shall continue after such principal use or structure has ceased or been removed, unless the accessory portion conforms to all regulations of this Ordinance. This Subsection shall prevail over any other provisions of this Ordinance that may be interpreted to the contrary.

Section 9. Termination of Nonconforming Use

(A) Termination Required by Modification. Whenever there is a nonconforming use which is nonconforming with respect to any of the regulations of this Ordinance, such use shall be required to do the following as a precondition to its receipt of any Building Permit:

(1) Whenever the nonconforming status is a result of signs, exterior lighting, landscaping, buffering or parking which does not comply with all requirements of this Ordinance, upon application for any site plan or subdivision related to the subject property, the nonconformity shall be required to comply with all such requirements prior to approval.

(2) Nonconforming extraction or disposal uses shall not be permitted to renew operations once the use is discontinued for six (6) months or more.

(3) Any nonconforming use which has ceased for one (1) year or greater shall be completely terminated.

Section 10. Nonconforming signs

A nonconforming sign shall not be changed, expanded, or altered in any manner which would increase the degree of nonconformity; prolong the useful life; or be moved in whole or in part to any other location where it would remain nonconforming.

(A) Termination of Nonconforming Signs.

(1) Immediate Termination. A sign constructed without permit, and/or cannot prove legal nonconforming status and which does not conform to this Ordinance, shall be removed upon written notice. A sign constructed without permit which does conform to this Ordinance shall apply for a sign permit and pay a penalty of 50% of the permit fee in addition to the required fee. Signs which advertise a business no longer conducted or a product no longer sold on the premises where such sign is located shall be removed by the current property owner.

(2) Termination by Abandonment. An abandoned sign shall be defined as any advertising device regulated under the provisions of this ordinance that does not display current, active

copy for a period of ninety (90) days or more. Any sign considered abandoned shall be removed.

(3) Failure to Remove. Nonconforming or Abandoned Sign. If property owner does not remove the sign within ninety (90) days the sign shall be removed without compensation and costs incurred shall be assessed to the property. After removal of the abandoned sign, the advertising device owner will forfeit all permits and will relinquish any right to apply for a new permit at the same location for a period of 90 days. Signs which are obsolete (that is, advertises something that is no longer there) or structurally unsafe or in disrepair will be considered abandoned.

(4) Termination by Change of Business. Any legal nonconforming sign advertising or relating to a business on the premises on which it is located shall be terminated upon any change in text of the sign.

(5) Termination by Damage or Destruction. Any legal nonconforming sign damaged or destroyed, by any means, to the extent of one-third of its replacement cost new shall be terminated and shall not be restored.

Article 22. Administration and Fees

Division 1. Zoning Administrator

The Zoning Administrator, as designated by the Board of Supervisors, shall have the principal responsibility of administering this Ordinance. The Zoning Administrator may delegate such administrative duties to staff as appropriate. The Zoning Administrator shall do, or cause to be done, the following:

(A) **Inspections.** Conduct inspections of use of land to determine compliance with the terms of this Ordinance.

(B) **Record-keeping.** Maintain permanent and current records of this Ordinance, including but not limited to all conditional uses, variances, appeals, and applications therefore.

(C) **Public information.** Provide and maintain a public information record relative to all matters arising under this Ordinance.

(D) **Applications.** Accept and review applications for development required under this Ordinance.

(E) **Recommendations.** Make reports and recommendations to the Planning and Zoning Commission, the Board of Adjustment, and the Board of Supervisors on applications and actions reviewed by each body.

(F) **Floodplain Administrator.** Review all floodplain development permit applications to ensure that the provisions of this Ordinance will be met and all necessary permits have been obtained from federal, state, and local governmental agencies.

(G) **Planning and Zoning Commission.** Forward to the Planning and Zoning Commission copies of all applications for plats, amendments to this Ordinance, and other matters on which the Planning and Zoning Commission is required to review.

(H) **Board of Adjustment.** Forward to the Board of Adjustment applications for appeals, variances, conditional uses, and other matters on which the Board of Adjustment is required to pass under this Ordinance

(I) **Board of Supervisors.** Forward recommendations from the Planning and Zoning Commission and the Board of Adjustment to the Board of Supervisors on matters on which the Board of Supervisors is required to pass under this Ordinance

(J) **Other actions.** Such other reasonable and appropriate actions necessary to effectively administer and enforce this Ordinance when not prohibited nor assigned to other agents by the terms of this Ordinance.

(K) **Fees.** Charge and receive such reasonable fees, as set by the Board of Supervisors from time to time, to help defray administrative costs related to reviewing applications, rezoning, conditional uses, appeals, variances, and other staff functions required under this Ordinance.

(L) **Interpretations.** Make interpretations as to the administration of this Ordinance as provided for in this Ordinance.

(M) **Appeals of decisions.** Any person affected by a decision of the Zoning Administrator in the enforcement of this Ordinance may appeal said decision to the Board of Adjustment.

Division 2. Planning and Zoning Commission

Section 1. Purpose and Authority

The Polk County Planning and Zoning Commission, reviews requests for zoning changes, plan amendments, text amendments and new subdivision developments and other items as required by law and makes recommendations to forward to the Board of Supervisors for action.

Section 2. Appointment

The Planning and Zoning Commission shall consist of seven (7) members, a majority of whose members shall reside within the County, but outside the corporate limits of any city be appointed by the Board of Supervisors.

Section 3. Powers and Duties

The powers and duties of the Planning and Zoning Commission shall include:

(A) Plan amendments. To review proposed amendments to the Polk 2030 Comprehensive Plan and Map, hold a public hearing and forward its recommendations to the Board of Supervisors.

(B) Rezoning. To recommend the boundaries of the various zoning classification districts and appropriate regulations and restrictions to be enforced and hold public hearings on proposed change, before submitting a written recommendation to the Board of Supervisors. The Board of Supervisors shall not hold its public hearing or take action until it has received the recommendation of the Planning and Zoning Commission.

(C) Text amendments. To recommend to the Board of Supervisors amendments, supplements, changes, or modifications to this Ordinance.

(D) Other duties. To perform all other duties assigned to the Planning and Zoning Commission in this Ordinance.

Section 4. Meetings and rules.

The Zoning Commission shall organize and adopt rules, which include the following:

(A) **Meeting time and place.**

All meetings of the Zoning Commission shall be held monthly as needed by the call of the chairperson and at such time and place within the County, proper notice can be provided.

(B) **Quorum.**

The presence of four (4) members shall be necessary to constitute a quorum.

(C) **Oaths and witnesses.**

The chairperson or, in their absence, the acting chairperson may administer oaths and compel the attendance of witnesses.

(D) **Public meetings.**

All meetings of the Zoning Commission shall be open to the public.

(E) **Minutes.**

The Zoning Commission shall keep minutes of its proceedings showing the results of any votes, and shall keep complete records of its hearings and other official actions.

(F) **Filing of decisions.**

Every recommendation of the Zoning Commission shall be forwarded to the Board of Supervisors and stated in the action to be considered and shall be a public record.

Division 3. Board of Adjustment

Section 1. Purpose and Authority

The Board of Adjustment is empowered through Chapter 335 of the Code of Iowa to grant special exceptions as provided in the Zoning Ordinance and to hear appeals to decisions made in the enforcement of the Zoning Ordinance. The Board has the authority to allow variances to the Zoning Ordinance for individual properties where provisions of the Chapter impose a unique and unnecessary hardship on the property owner and where the granting of a variance is not contrary to the intent of the Zoning Ordinance or to the public interest. The Board is a quasi-judicial body whose decisions may be appealed directly to District Court.

Section 2. Appointments and terms.

The Board of Adjustment shall consist of five (5) members appointed by the Board of Supervisors. Terms shall be for five (5) years and vacancies shall be filled for the unexpired term of any member whose term becomes vacant. The Board of Supervisors shall have power to remove any member of the Board of Adjustment for cause upon written charges and after public hearing.

Section 3. Powers and Duties

The Board of Adjustment may, in appropriate cases, and subject to appropriate conditions and safeguards, make special exceptions to the terms of the ordinances or regulations in harmony with its general or specific rules therein contained, and provide that any property owner aggrieved by the action of the Board of Supervisors in the adoption of such regulations and restrictions may petition the said Board of Adjustment direct to modify regulations and restrictions as applied to such property owners.

The duties of the Board of Adjustment shall be:

(A) To hear requests for variances to the provisions of this Ordinance;

(B) To review and decide upon applications for conditional uses; and

(C) To hear appeals of interpretations of the Zoning Administrator.

Section 4. Meetings and rules.

The Board of Adjustment shall organize and adopt rules in accordance with provisions of this Ordinance and the Iowa Code Chapter 335; such rules shall include at a minimum the following:

(A) Meeting time and place.

All meetings of the Board of Adjustment shall be held at the call of the chairperson and at such time and place within the County as the Board of Adjustment may determine and proper notice can be provided.

(B) Quorum.

The presence of three (3) members shall be necessary to constitute a quorum.

(C) Oaths and witnesses.

The chairperson or, in their absence, the acting chairperson may administer oaths and

compel the attendance of witnesses.

(D) Public meetings.

All meetings of the Board of Adjustment shall be open to the public.

(E) Minutes.

The Board of Adjustment shall keep minutes of its proceedings showing the results of any votes, and shall keep complete records of its hearings and other official actions.

(F) Filing of decisions.

Every order, requirement or decision of the Board of Adjustment shall immediately be filed in the office of the Zoning Administrator and shall be a public record.

Section 5. Hearing of appeals

(A) Scope of authority.

The Board of Adjustment shall have the power and it shall be its duty to hear and decide appeals where it is alleged there is error in an order, requirement, decision, or determination made by the Zoning Administrator in the enforcement of this Ordinance.

(B) Applications.

An application in cases in which the Board of Adjustment has jurisdiction under the provisions of this Ordinance may be made by any person aggrieved, by any property owner, or by a governmental officer, department, board or bureau. Such application shall be filed with the Zoning Administrator who shall transmit it to the Board of Adjustment along with all the papers constituting the record upon which the action appealed from was taken.

(C) Hearing of appeal.

The Board of Adjustment shall select a reasonable time and place for the hearing of the appeal and give due notice thereof to the parties by one publication of a notice in a publication of general circulation within Polk County, said publication to be made not less than four (4) days nor more than twenty (20) days before the date of hearing. At the hearing, any party may appear in person or by representative.

(D) Decision.

The Board of Adjustment shall reach its decision within forty-five (45) days of the date of the public hearing unless such time is extended by mutual consent of the petitioner and the Board of Adjustment. The Board of Adjustment may, in conformity with the provisions of this Ordinance, affirm or reverse, wholly or in part, or may modify the order, requirement, decision, or determination appealed from and may make such order, requirement, decision, or determination as ought to be made, and to that end shall have all the powers of the officer from whom the appeal is taken.

(E) Necessary votes.

The concurring vote of three (3) members of the Board of Adjustment shall be necessary to reverse any requirement, decision, order, or determination of the Zoning Administrator or to decide in favor of the applicant in regard to any matter upon which the Board is authorized

by this Ordinance to render a decision.

(F) Records.

The Zoning Administrator shall maintain records of all actions of the Board of Adjustment relative to appeals.

(G) Authority limited.

It is not the intention to grant to the Board of Adjustment the power or authority to alter or change the Zoning Ordinance or the District Maps. Such power and authority rest solely with the Board of Supervisors.

Section 6. Petition to Court

Any person or persons, jointly or severally, aggrieved by any decision of the Board of Adjustment, or any taxpayer, officer, department, board, or bureau of the County, may present to a court of record a petition, duly verified, setting forth that such decision is illegal, in whole or in part, specifying the grounds of the illegality. Such petition shall be presented to the court within thirty (30) days after the filing of the decision in the office of the Board of Adjustment.

Division 4. Interpretations

Section 1. Purpose

The provisions of this Section are intended to provide a simple and expeditious method for clarifying ambiguities in the text of this Ordinance, the Zoning Map which it incorporates, and the rules adopted pursuant to the Ordinance. This Section is also intended to provide a simple, yet defined procedure for providing flexibility with new or unfamiliar land uses.

Section 2. Authority

The Zoning Administrator may, subject to the procedures, standards, and limitations set forth in this Section, render interpretations of any provision of this Ordinance or any rule or regulation issued pursuant to it, including interpretations of the various uses in any district not expressly mentioned in this Ordinance.

Section 3. Procedure for Interpretations

(A) All applications for an interpretation of any provision of this Ordinance, the Zoning Map, or any rule or regulation adopted pursuant to this Ordinance shall be submitted in writing to the Zoning Administrator. Each application shall set forth the specific provision or provisions to be interpreted, the facts of the specific situation giving rise to the request of an interpretation, and the correct interpretation claimed by the applicant. Before rendering any interpretation, the Zoning Administrator shall receive such further facts and information judged by the Zoning Administrator to be necessary for a meaningful interpretation of the provision in question.

(B) Since the information required for interpretations involving land-uses is different from the information required to render other types of interpretations, additional information is required for land-use interpretations. Land-use interpretations are generally tied to a specific property and the specific land-use proposed to be permitted; other interpretations are not tied to a specific piece of property, but should apply uniformly to all properties. Therefore, applications for a land-use interpretation shall contain at least the following information and documentation, in addition to the information required above:

(1) the applicant's name, address, and interest in the subject property; and

(2) the owner's name and address, if different from the applicant's, and the owner's signed consent to the filing of the application; and

(3) the names and addresses of all professional consultants advising the applicant with respect to the interpretation; and

(4) the street address and legal description of the subject property; and

(5) the zoning classification and present use of the subject property; and

(6) a complete description of the proposed use; and

(7) the uses permitted by the present zoning classification which are most similar to the proposed use; and

(8) documents, statements, and other evidence demonstrating that the proposed use will comply with all use limitations established for the district in which the subject property is located.

(9) any other information or documentation as the Zoning Administrator deems necessary or

appropriate for a full and proper consideration and disposition of the application.

Section 4. Interpretation by the Zoning Administrator.

Within fourteen (14) days following the receipt by the Zoning Administrator of a completed application for interpretation, the Zoning Administrator shall mail a written copy of the interpretation to the applicant. The Zoning Administrator shall state the specific precedent, reasons, and analysis on which such interpretation is based. The failure of the Zoning Administrator to render an interpretation within fourteen (14) days or a longer period of time as may be agreed to by the applicant, shall be deemed to be a rejection of the applicant's proposed interpretation. The Zoning Administrator shall keep a copy of each interpretation on file and make a copy of each interpretation available to the public inspection.

Section 5. Appeal

Appeals on interpretations rendered by the Zoning Administrator pursuant to this Section may be taken to the Board of Adjustment according to the following procedure:

(A) Any appeals on the ruling of the Zoning Administrator concerning the enforcement and interpretation of any provision of this Ordinance shall be filed with the Board of Adjustment within thirty (30) days after the date of the Zoning Administrator's decision thereon.

(B) All appeals made to the Board of Adjustment shall be in writing on forms specified by the Board of Adjustment and accompanied by fees prescribed by resolution of the Polk County Board of Supervisors.

(C) All appeals and applications shall refer to the specific provisions of this Ordinance involved.

(D) The Board of Adjustment shall select a reasonable time and place for hearing the appeal and give due notice thereof to parties interested.

(E) The Board of Adjustment may affirm, reverse, wholly or in part, or modify the interpretation.

(F) Within thirty (30) days after the close of a hearing, the Board of Adjustment shall render a written decision giving the reason(s) for its decision.

Section 6. Standards for Interpretations and Appeals

The following standards shall govern both the Zoning Administrator's interpretation and the Board of Adjustment's decision on appeals from the Zoning Administrator's interpretation.

(A) No interpretation shall allow the establishment of any land-use which was previously considered and rejected by the Board of Adjustment or an application for amendment to the Zoning Ordinance of the Zoning Map.

(B) No interpretation shall permit a land-use that is listed as a permitted use or a conditional use in another district if the use is not listed as permitted in the subject property's district.

(C) No interpretation shall permit a land-use in a district unless evidence is presented which demonstrates that the land-use will comply with each use limitation established for the particular district.

(D) No interpretation shall permit a land-use in a particular district unless the use is substantially similar to other uses permitted in that same district and is more similar to such other uses than to uses either not permitted in the district, or permitted or conditionally permitted in a

less restrictive district.

(E) If the proposed land-use is more similar to a land-use permitted only as a conditional use in the district than to a permitted use in the district, then an interpretation of the proposed land-use being a conditional use, thus requiring a conditional use permit, shall be favored.

(F) Any land-use permitted or other interpretation rendered pursuant to this Section shall fully comply with all requirements and standards imposed by this Ordinance.

Section 7. Effect of Favorable Interpretation

No interpretation finding a particular land-use to be permitted or conditionally permitted in a specific district shall authorize either the establishment of such use or the development, construction, reconstruction, alteration, or moving of any building or structure, but shall merely authorize the preparation, filing, and processing of applications for any permits and approvals which may be required by the codes and ordinances of Polk County or other governmental agencies having jurisdiction. These permits and approvals include, but are not limited to, Conditional Use Permits, Building Permits, and Certificates of Occupancy/Use.

Similarly, any interpretation rendered does not exempt applicants from the requirements of this Ordinance, its rules, or its regulations, but rather should clarify both the application and intent of such ordinances, rules, and regulations.

Division 5. Fees

The Board of Supervisors by resolution shall set fees to administer this Ordinance and change them as necessary.

Article 23. Enforcement

Division 1. Violations

Section 1. Prevention of Violations

In case any building is, or is proposed to be, located, erected, constructed, reconstructed, altered, repaired, converted, maintained, or used, or any land is or is proposed to be used, in violation of this Ordinance or any amendment or supplement thereto, the Board of Supervisors, the County Attorney of Polk County, the Zoning Administrator, or any adjacent or neighboring property owner who would be specifically damaged by such violation, in addition to other remedies provided by law, may institute an injunction, mandamus, abatement, or any other appropriate action or proceeding to prevent, restrain, correct, or abate such unlawful location, erection, construction, reconstruction, alteration, repair, conversion, maintenance, or use, to prevent the occupancy of said building or land, or to prevent any illegal act, conduct, business, or use in or about such premises, or to cause such buildings to be demolished or remodeled.

Section 2. Violations

(A) It shall be unlawful to locate, erect, construct, reconstruct, alter, repair, convert, or maintain any building, land, or structure, or use any land, building or sign in violation of any regulation in, or any provisions of, this Ordinance, or any amendment or supplement thereto, lawfully adopted by the County Board of Supervisors; or to fail to comply with any reasonable requirement or condition imposed by the Board of Adjustment.

(B) Any person, firm or corporation found to be in violation of any provision of this ordinance shall be served written notice by the Zoning Administrator or designee stating the nature of the violation and providing a reasonable time limit for the satisfactory correction thereof. Such person shall, within the period of time stated in the notice, take all necessary action to correct the violation and shall permanently cease such violation.

(C) Each day during which the violation continues shall be a separate violation.

(D) A Notice of Violation may be served as a first attempt to gain compliance. If compliance is not met with the sending of a Notice of Violation then a Citation shall be served on the property owner. The offender shall be provided a reasonable time, (not to exceed) thirty (30) days in which to correct the violation.

(E) A violation which occurs for a short period of time is observed and there is no other reasonable means for insuring compliance, be served a citation immediately upon observation of a violation.

(F) If the violation is not corrected, Polk County may seek such remedies, civil or criminal as are authorized by law.

(G) The Zoning Administrator or a designee is hereby authorized to enter upon open land in Polk County for the purpose of enforcing and implementing this Ordinance.

Division 2. Penalties and Remedies

Section 1. Penalties

The Zoning Administrator or designee may assess the maximum civil penalty per day for each violation allowed upon each violation, as outlined in the Polk County Code of Ordinance that continues to exist.

Section 2. Remedies

(A) If work is being done in violation of any provision of this ordinance and continues beyond the date of notice and the work is not being done to correct a violation, an immediate stop-work order shall be issued by the Administrator. Such order shall be given to the owner of the property, his authorized agent, or the person or persons in charge of the activity on the property and shall be posted upon the property. The stop work order shall state the conditions under which work may be resumed.

(B) Violations by an individual or property owner will prohibit any additional permits for that property or other properties to be issued unless said permits will remedy abatement of the violation. Stop work orders will be placed on any work on other property in which the violator is operating or owns.

(C) If the Administrator determines that a violation is an immediate threat to public safety or welfare and the property owner has failed to take corrective action within the time period stated in the notice provided, Polk County may take such remedial action as is necessary to protect the public safety or welfare. Such remedial action may include entering the property where a violation is present, correcting the violation, and placing a lien on the property to secure payment and reimbursement of any and all expenses incurred by Polk County to correct such violation.