Standard Operation Procedures for Beta Attenuation Mass Monitor BAM 1022

In Use By

Polk County Air Quality
Ambient Air Monitoring Personnel

For Calendar Year 2016

Revised: March 10, 2016

Section: 29
Revision: 2

PREPARED BY

_____ _____

Polk County Air Quality Air Pollution Monitoring Specialist ***Date***

SIGNATURES/APPROVALS

_____ _____

Polk County Air Quality Assurance Officer ***Date***

POLK COUNTY AIR QUALITY DIVISION

STANDARD OPERATING PROCEDURE MANUAL FOR MET-ONE INSTRUMENTS BETA ATTENUATION MASS MONITOR

Table of Contents Page

29.1 Purpose……..3
29.2 Scope……..……3
29.3 References…… 3
29.4 Introduction..…….. 3
29.5 Health and Safety Warning/Precaution……4
29.6 Sampler Set-up….. …….. 4
29.6.1 Inspecting New Equipment…….. 4
29.6.2 Set-Up of New Equipment……4
29.6.2.1 Unit Assembly…….. 5
29.6.2.2 Connections…….…… 5
29.6.2.3 Loading Filter Tape……6
29.6.2.4 Agilaire Model 8832 Data Logger Connections…..……. 7
29.6.2.4.1 Clock Sync Connection……. 7
29.6.3 Field Set-Up…… 7
29.6.3.1 Clock Set…….. 7
29.6.3.2 Self Test……7
29.6.3.3 Temperature Relative Humidity and Pressure Sensor...…….…. 7
29.6.3.4 Hourly Report……8
29.6.3.5 Inlet Heater…… 8
29.6.3.6 Concentration Units…… 8
29.6.3.7 Agilaire Data Logger Configuration…… 8
29.7 Standards ……8
29.7.1 Transfer Standards ……... 8
29.7.2 Audit Standards…… 9
29.7.3 Qualification, Certification and Recertification…… 9
29.8 Quality Control…..…..…… 9
29.8.1 Field Zero Background Calibration…… 9
29.8.1.1 Leak Check Procedure……9
29.8.1.2 Background Zero Calibration…… 9
29.9Equipment, Maintenance and Trouble Isolation…….....10
29.9.1 The Monitoring Station……..... 10
29.9.2 Preventative Maintenance……... 11
29.9.2.1 Field BKGD Zero Tests……..…….....11
29.9.2.2 Nozzle/Count Test Rate Test…….....11
29.9.2.3 Span Mass Audit……..... 11
29.9.2.4 Filter Sensor Testing……..…….....12
29.9.2.4.1 Filter Temperature Sensor…… 12
29.9.2.4.2 Filter Relative Humidity Sensor……... 12
29.9.2.4.3 Filter Pressure Sensors……...12
29.9.2.5 Internal Nozzle Cleaning……13
29.9.2.6 Pump……..13
29.9.3 Trouble Isolation…… 13
29.10 Quality Assurance (Accuracy –Audits)…….. 14
29.11 Data Quality Assessment…… 14
29.11.1 Precision…….. 14
29.11.2 Accuracy…… 15
29.11.3 Data Completeness……...….. 15
29.12 Calibrations-Temperature, Pressure and Flow……..... 15
29.13 Sampler Operations……16
29.13.1 Quality Control...……16

29.13.1.1 Leak Check……..…….. 16
29.13.1.2 Temperature Check…….. 16
29.13.1.3 Pressure Check……. 16
29.13.1.4 Flow Check…….17
29.13.1.5 Maintenance……..17
29.13.2 Procedures…….. 18
29.13.3 Bi-weekly Verifications…….. 18
29.13.3.1 Temperature, Pressure and Flow Verifications……. 18
29.13.3.2 Leak Checks……...19
29.13.3.3 Clock Verification……. 19
29.13.4 Monthly Maintenance Procedures……20
29.13.4.1 Maintenance of the Very Sharp Cut Cyclone/Sharp Cut Cyclone (SCC)……20
29.13.4.2 Maintenance of the PM10 Head Assembly……. 20
29.13.4.2.1 Maintenance of the Top Acceleration Assembly……20
29.13.4.2.2 Maintenance of the Lower Collector Assembly…….. 22
29.13.4.2.3 Reassemble and Reinstallation of Inlet……23
29.13.5 Maintenance of the Nozzle and Vane…….. 23
29.14 Retrieving BAM-1020 Internal Data…….. 23
29.15 AQS Data Validation…….. 29

FIGURES

Figure 29-1: Diagram of Proper Filter Tape Loading Procedures……..……..7
Figure 29-2: Schematic Drawing of the Air Flow through a Very Sharp Cut Cyclone/Sharp Cut Cyclone…….21
Figure 29-3: Maintenance of the PM10 Head Assembly…… ……. .22

TABLES

Table 29-1: Audit Activities and Acceptance Criteria……14
Table 29-2: Calibration, Verification, and Maintenance Check Intervals…….. 17

Appendix A-Forms & Field Sheets……25

29 STANDARD OPERATING PROCEDURE FOR THE MET-ONE INSTRUMENTS BETA ATTENUATION MASS MONITOR (BAM-1022)

29.1 Purpose

To establish a standard operating procedure (SOP) for the Polk County Air Quality Division personnel concerning the procedures involved with the operation of the Met-One Instruments Beta Attenuation Mass Monitor (BAM-1022).

29.2 Scope

These procedures are to be used by Polk County Air Quality Division personnel. The objective of this SOP is to familiarize the station operator with procedures used in the collection of air monitoring data. The accuracy of data obtained from any instrument depends upon the instrument's performance and the operator's skill. It is important that the station operator become familiar with both this SOP as well as the manufacturer's operation manual in order to achieve a high level of data quality. This SOP is to be used as an outline and is not intended to replace the equipment manufacturer's manual or procedures.

29.3 References

29.3.1 40 Code of Federal Regulations (CFR) Part 58, Appendix A, Quality Assurance Requirements for State and Local Air Monitoring Stations (SLAMS).

29.3.2 Quality Assurance Guidance Document 2.12, Monitoring PM2.5 in Ambient Air Using Designated Reference or Class I Equivalent Methods, USEPA, Nov. 1998 (http://www.epa.gov/ttn/amtic/pmqainf.html).

29.3.3 40 Code of Federal Regulations (CFR) Part 50, Appendix L, Reference Method for the Determination of Particulate Matter as PM2.5 in the Atmosphere.

29.3.4 BAM 1022 Continuous Particulate Monitor Operation Manual, BAM-1022-9800 Rev C. Met One Instruments, Inc., 2015.

29.3.5 BX-302 Zero Filter Calibration Kit Manual, BX-302-9800 Rev F. Met One Instruments, Inc., 2013

29.3.6 Model 597 Temperature, Relative Humidty, Barometric Pressure Sensor Operation Manual. 597-9800 Rev A. Met One Instruments Inc., 2013

29.3.7 Quality Assurance Handbook for Air Pollution Measurement Systems, Volume II, May 2013 edition, Appendix D

29.4 Introduction

This document describes the procedures used to measure relative particulate concentration by Beta Attenuation using the Met-One Instruments Beta Attenuation Mass Monitor, Model 1022. It is intended that this document be used together with the sampler-specific information and instructions provided by the manufacturer.

The BAM-1022 uses beta ray attenuation to calculate collected particle mass concentrations in units of ug/m^3. A ^{14}C element emits a constant source of low-energy electrons, also known as beta particles. The beta rays are attenuated as they collide with particles collected on a filter tape. The decrease in signal detected by the BAM scintillation counter is inversely proportional to the mass loading on the filter tape.

The Met One BAM-1022 collects particles by pulling a measured volume of ambient air through filter paper. In operation, the Beta detector counts the number of Beta particles passing through the filter paper before and after the filter paper collects particulate matter. A known amount of electron scattering and attenuation through a

clean filter is compared with that of a dust-sampled filter. To calculate the mass concentration, a ratio of the number of detected beta particles passing through the filter and the sample volume is used.

The radioactive carbon 14 Beta source has been selected to match the energy of the Beta spectrum to the mass to be measured. The carbon 14 Beta source has a long half-life of 5,700 years, which translated to a constant level of energy without other spectral emissions.

29.5 Health and Safety Warning/Precautions

Only properly trained personnel should perform BAM-1022 testing, installation, operation, maintenance and calibration procedures. As with all monitoring equipment, precautions should be taken when working around electricity, power tools and above ground elevations.

The carbon 14 radioactive Beta source (^{14}C) should never be dismantled, removed or tampered with. It will never be necessary for any field personnel to adjust, replace or touch the ^{14}C source. All ^{14}C issues will be handled by the manufacturer. When working with the BAM door open and in the immediate vicinity of the ^{14}C source, the wearing of long sleeves and laboratory gloves may help reduce possible exposure to ^{14}C Beta rays.

29.6 Sampler Set-up

The BAM-1022 monitor has specific physical requirements that should be considered prior to installation. The BAM-1022 must be operated outdoors and should NOT be installed inside of a building, trailer, or other shelter. It must be allowed to run at ambient conditions. All Polk County BAM-1022 monitors will be deployed outside.

Specifications for siting a BAM-1022 will mirror the Federal EPA PM2.5 criteria listed in the Code of Federal Regulations (40 CFR 58, Appendix A).

29.6.1 Inspecting New Equipment

Upon receipt of the BAM-1022, visually inspect it to ensure that all components are accounted for. Inspect the instrument for external physical damage due to shipping, such as scratched or dented panel surfaces and broken knobs or connectors.

Open the instrument cover and remove all interior foam packing and save (in case future shipments of the instrumentation are needed). Make note of how the foam packing was installed.

Inspect the interior of the instrument for damage, such as broken components or loose circuit boards. Make sure that all of the circuit boards are completely secured. (Loose boards could short out the motherboard). If no damage is evident, the monitor is ready for installation, calibration and operation. If any damage due to shipping is observed contact the manufacturer for instructions on how to proceed.

Notify Met One Instruments immediately if any equipment is missing or damaged. Repack it in the same way it was delivered.

29.6.2 Set-Up of New Equipment

The BAM-1022 is a weatherproof monitor and must be operated outside of any additional enclosures. Its housing is designed to maintain a near constant temperature difference between ambient and measurement conditions.

29.6.2.1 Unit Assembly

Remove the cover from the top of the pump box assembly and set it aside. Remove all packing material from inside the box and gather the loose ends of the cables and tubing. Invert the cover so that the white nipple is protruding upward, feed the cables and tubing through it from the bottom, and then replace it atop the pump box assembly.

Open the front door of the main enclosure and remove the protective packing material from around the touch display. On the back of the main enclosure remove the four wing nuts holding the cable access cover in place and then remove the cover. Behind the cable access panel, locate the ingress on the right hand side of the bottom of the enclosure. Lift the monitor and carefully feed the cabling and tubing through this hole and continue to lower the unit until the white nipple extends in to the housing and the monitor is resting flat on top of the pump box assembly. If the side latches do not securely fasten the main housing to the pump box assembly, you will need to adjust the depth of the latches. **Caution: Do not lift the BAM-1022 monitor by the angled solar radiation shield mounted on top of the enclosure. It is not designed to hold the weight of the full assembly and can easily be damaged if used to lift the monitor. It may be best to have two people for this step.**

Wrap the lower threads of the pipe seal with Teflon tape and install in on the top of the enclosure. Insert the black sealing ring and loosely attach the white clamping ring to the pipe seal. Remove the red cap covering the inlet tube receiver inside the BAM-1022 enclosure, as well as the smaller red insert in the receiver. Slide the inlet tube through the pipe seal on top of the enclosure just until you can see it inside the enclosure. Position the inlet heater beneath the inlet tube and slide the tube through the heating element until it comes in contact with the o-rings. Raise the inlet heater so it is near the top of the enclosure making sure it is not touching the top and fasten it in position using the supplied hex wrench. Rotate the inlet tube so that the heater power cable is facing the back left corner of the enclosure and route the cable down the large empty hole located near that corner. Push the inlet tube all the way down and wrap the heater element in the supplied insulating material.

Install the 597 ambient temperature, pressure, and relative humidity probe to the inlet tube above the roof of the BAM-1022 enclosure using the U-bolt with nuts and washers provided. Connect the silver connector end of the cable to the silver connection on the bottom of the sensor.

29.6.2.2 Connections

Route the pump cable, the pump box fan cable, and the pump tubing coming up from the pump box assembly to the appropriate locations and plug them into the monitor. Plug the pump box fan in to the duplex outlet above the plug labeled “Heater”. Connect the ground lead zip tied to the yellow pump cable to the ground connection on the BAM-1022 case. Plug the pump cable I to the outlet labeled “Pump”. The pump cable outlet is a twist lock. Once inserted rotate the plug clockwise to lock it in place. The pump tubing connection is a compression fitting. To insert the tubing into the 90 degree fitting simply press it in to the fitting. Route the inlet tube heater plug to the power connection labeled “Heater” and plug it in. The outlet for the heater is also a twist lock outlet. Once inserted rotate the plug clockwise to lock it in place. Route the sensor cable for the 597 probe to the back of the enclosure and attach it to the connection labeled

"EXTERNAL AMBIENT SENSOR". Install the AC power supply cable to the remaining connection on the bottom of the power strip. It is located next to the ON/OFF toggle switch.

29.6.2.3 Loading Filter Tape

Loading the filter tape must be performed before accessing other BAM-1022 functions. Press the "Operate Menu" button on the touch screen and select the "LOAD FILTER TAPE" option. Entering this screen will cause the nozzle to rise and instructions to load the tape per the door mounted diagram are displayed. Remove the Plexiglas cover by pulling at the bottom to release the Velcro holding strip and then lifting the cover off of the two alignment pins at the top. Unscrew and remove the two plastic reel covers. Slide an empty tape spool core on to the take up reel (left reel), use the grey core tube that came with the instrument for this. Unwrap a new roll of filter tape. Place the full roll on the supply reel (right reel) and route the tape through nozzle and vane as indicated on the inside of the door on the instrument. Fasten the loose end of the new filter tape to the take up spool with a piece of tape. Rotate the spools by hand to remove tape slack. Replace the two clear plastic reel covers and fasten the screws tightly by hand.
NOTE: The filter tape must be changed once every 60 days under normal operating conditions.

Press the grey "MOVE" button to move the tape and verify it has been properly loaded. If the tape is correctly installed the display will report "TAPE IS OK!" in green letters next to the grey "MOVE" button. If there is a problem, it will report "TAPE FAIL" in red letters. Verify the tape is properly loaded, remove any slack, and press the move button again and verify the tape is loaded correctly. Wherever the tape comes in contact with the rollers, the entire width of the tape should be on the roller with a little bit of the roller's edge showing.

Figure 29-1 Diagram of the Proper Filter Tape Loading Procedures

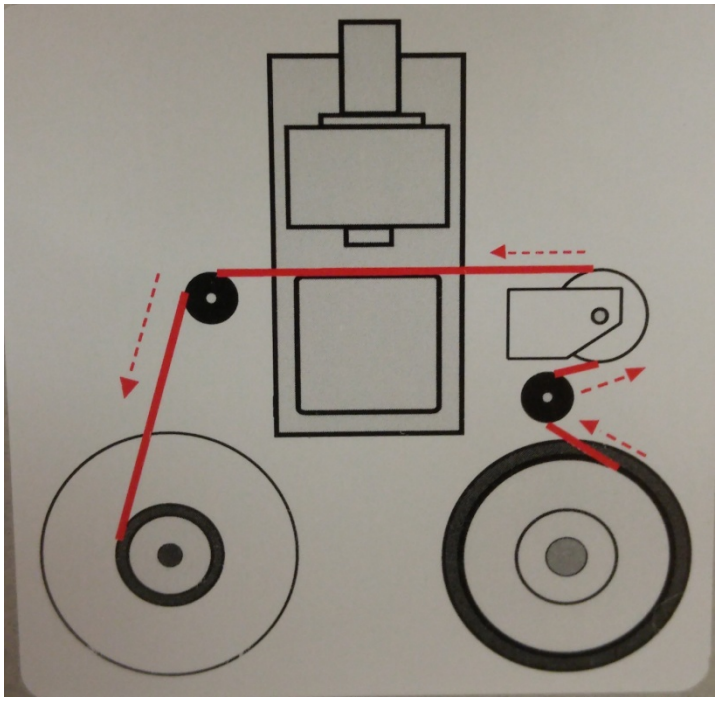

29.6.2.4 Agilaire Model 8832 Data Logger Connection

When using the Agilaire Model 8832 data logger. The Agilaire 8832 contact closure commands are independent of channel configurations. Since the BAM 1022 does not have an early cycle the analog out concentrations will not be used.

29.6.2.4.1 Clock Sync Connection

A contact closure connection is required to sync the BAM monitor clock with the Agilaire 8832 data logger.

Attach one end of a shielded 2-wire cable to the connectors at the rear of the BAM monitor labeled “ISO IN”. Attach the other end of the 2-wire cable to the “Relay Out” channel on the data logger. The BAM will reset the clock to the top of the hour when the signal from the logger is received. Make sure the relay on the logger is set to normally open.

29.6.3 Field Set-Up

Each BAM-1022 is calibrated at the factory and therefore has unique calibration settings. The correct settings are located in section 3 of the Operation Manual. The BAM-1022 user interface is a touchscreen display. All of the features and functions are accessed using the touchscreen.

In addition to the last hourly concentration reading the Main operating screen shows current real-time values measured and the operational state of the BAM-1022. If this screen is not being displayed press the Home icon in the top right corner of the screen.

The Setup Menu grants access to the configuration of the majority of the operating parameter for the BAM-1022. To access the various menus press the three horizontal lines in the top left corner of the screen.

29.6.3.1 Clock Set

When setting up the BAM-1022, it is crucial that the clock is set to the data logger clock (within 30 seconds). If the clocks are not set to within 30 seconds of each other, then the clock syncing program will not work and the data will be flagged.

To set the clock: Go to Setup Menu, then press Set Clock. After entering the proper date and time using the touch screen press the SET button. Press the X in the top right hand corner then the Home button. Confirm that the correct date and time are displayed in the main menu.

29.6.3.2 Self Test

Once the unit is fully assembled and filter tape has been installed a self test should be performed. The self test checks the movement of tape, nozzle movement and flow. To perform this test go to the Test Menu then press Run Self Test. The test will start automatically. When the test is finished the display will change to SELF-TEST COMPLETE.

29.6.3.3 Temperature and Pressure Sensor

Check for the proper setup of 597 Temperature, Relative Humidity and Pressure Sensor: Go to Test Menu, then to Digital Link. The 597 firmware should be displayed when the proper link is established.

29.6.3.4 Hourly Report

Check to make sure the BAM 1022 is putting the correct time stamp on the hour. Go to Setup Menu then Hourly Report and make sure it is set to Beginning. Data collected for the Hour from 8:00 to 9:00 will be mark as 8:00.

29.6.3.5 Inlet Heater

Check for proper setup of the Inlet Heater: Go to Setup Menu, then to Inlet Heater. For PM2.5 monitoring, set RH set point to 35%. The Inlet Heater will be automatically turned on full power whenever the humidity in the sample stream exceeds 35%. When the RH falls back below 35%, the heater turns off. If there is reason to believe the heater is not working properly it can be tested and should have a resistance of 144 ohms.

29.6.3.6 Concentration Units

Check to make sure the BAM-1022 is set up to report in the proper unit: Go to Setup Menu, then to Conc. Units. Make sure the BAM is set to report in ug/m3.

29.6.3.7 Agilaire Model 8832 Data Logger Configuration

Configure the Digital Event Program (BAM) to turn on an output relay at the top of the hour for 5 seconds, and repeat every hour. The purpose of this is to ensure the BAM will reset the clock at the top of the hour.

Configuration Digital Event Program

Dig. Event Program Name	:	BAM
Starting Time	:	01/01/16 00:00:00
Repeat Interval	:	1h
Output Line(s)	:	1,
Output Duration	:	5s
Disable During Cal(s)	:	(none)

29.7 Standards

29.7.1 Transfer Standards

Transfer standards are used to calibrate the station "field" samplers and to perform verifications. Instruments designated as transfer standards are used so the primary standard can remain at a fixed laboratory location where conditions can be carefully controlled and damage to the instrument minimized. Transfer standards are calibrated against the higher-level, primary standards. All transfer standards must be accompanied by the following:

- The manufacturer's manuals for the instruments
- A logbook including a complete chronological record of all certification and recertification data as well as all sampler calibrations carried out with the transfer standard
- A complete listing and description of all equipment, materials, and supplies necessary or incidental to the use of the transfer standard
- A complete and detailed operational procedure for using the transfer standard, including all operational steps, specifications and quality control checks

29.7.2 Audit Standards

Audit standards are used to challenge the station "field" sampler and to perform accuracy checks on a quarterly basis. Audit standards are calibrated against the higher-level, primary standards. All audit standards must be accompanied by the following:

- The manufacturer's manuals for the instruments
- A logbook including a complete chronological record of all certification and recertification data as well as all sampler calibrations carried out with the audit standard
- A complete listing and description of all equipment, materials, and supplies necessary or incidental to the use of the audit standard
- A complete and detailed operational procedure for using the audit standard, including all operational steps, specifications and quality control checks

29.7.3 Qualification, Certifications and Recertification

Qualification consists of demonstrating that the transfer and audit standards are sufficiently stable (repeatable) to be useful as a transfer standard. Repeatability is necessary over a range of variables such as temperature, line voltage, barometric pressure, elapsed time, operator adjustments, or other conditions, any of which may be encountered during use of the transfer standard. After a transfer and audit standard has been shown to meet the qualification requirements, certification is required before it can be used.

29.8 Quality Control

29.8.1 Field Zero Background Calibration

The Background value is a correction offset for the concentration data collected by the BAM-1022. This value is factory calibrated for each unit under laboratory conditions. The BAM units set up for running PM2.5 need to have this value field verified (and adjusted if necessary) prior to first use and then every 6 months using the BX-302 Zero Filter Calibration Kit. This test corrects the BKGD value to compensate for minor variations caused by local conditions such as grounding and shelter characteristics.

Note: Always perform a leak check before and after changing the Background value. Leaks at the nozzle will appear as a background problem. Also, inspect for debris around the nozzle that could cause the nozzle to rest higher than it should when in the down position.

29.8.1.1 Leak Check Procedure

Remove the PM10 head assembly and the PM2.5 SCC from the inlet tube and install BX-302 leak test valve onto the inlet tube. Turn the valve to the OFF position to prevent any air from entering the inlet tube.

Verify the nozzle is in the down position. If it is not pres the nozzle control button to lower it. Press the grey pump control in the lower left corner to turn the pump on. The flow rate should drop below 1.0 LPM. If the leak value is greater than 1.0 LPM, then the nozzle and vane may need cleaning, or there may be another leak in the system. See section 6.3 of the Operations Manual for isolating leaks, in the event that a basic leak check fails.

29.8.1.2 Background Zero Calibration

When setting the Background Value, run the BAM-1022 for a minimum of 76 hours with the BX-302 installed.

Remove the PM10 head assembly and the PM2.5 SCC from the inlet tube and install the BX-302 leak test valve onto the inlet tube. All zero air tests are done using filtered outdoor air. Make sure that the valve is fully open so that the unit is pulling sample air through the inline HEPA filter at the top of the tool. To prevent water from getting into the HEPA filter, a rain hood has been built for use with the HEPA Filter.

The Inlet Heater should be installed and configured in the same way as it would during normal operation. If the monitor has been shut off, allow it to warm up for 1 hour prior to the start of the 76 hour period.

Go to the Setup Menu screen, then Background. Chang Background value to 0.0000

After the 76 hours of sampling is finished, ignore the first 4 hours after the BAM starts gathering data. The average concentration for the 72-hour period varies from unit to unit, and typically will be a number between -3 and 1 $\mu g/m^3$. The unit has to have 72 consecutive hours of data for the background zero to be valid. Outliers should be investigated, but not excluded from the calculations unless it can be shown that they arise from conditions that will not occur during routine sampling. A statistical analysis should be done on the zero test data to determine if it is acceptable. Download hourly averages for the zero test period from the internal memory of the BAM. Calculate an average to four decimal places. Compare the new zero value to the factory zero. The values should be within a couple of micrograms. The standard deviation should be calculated to four decimal places. This value varies from unit to unit but should be less than 2.4 micrograms.

If these criteria are not met, the operator will troubleshoot the instrument until a zero test is completed with acceptable results. If these criteria are met, average the 72-hour period, multiply by negative 1, and set the result as the Background. Enter the new background number into the Background screen.

For further instructions, see Met One Instruments BX-302 Zero Filter Calibration Kit Manual.

Following the Background Zero Calibration, follow section 29.13.1.1 to repeat a leak check.

29.9 Equipment, Maintenance and Trouble Isolation

There are several routine duties that must be performed each time an air monitoring station is inspected. These duties include equipment inspection, performing calibrations, assisting during audits, documentation, and making necessary adjustments or repairs to the instruments.

29.9.1 The Monitoring Station

It is the operator's responsibility to maintain the monitoring station. Routine maintenance includes keeping site clean and being observant of potential problems. Examples of potential problems include:

- Accumulation of dirt and debris

- Infestation by rodents or insects
- Overgrowth of vegetation around the site

29.9.2 Preventative Maintenance

Each instrument must be periodically examined and serviced to anticipate and prevent instrument failure. Scheduled maintenance on the instruments will prevent costly repairs and loss of data. The routine maintenance required on the samplers by the station operator is minimal and is outlined in the manufacturer's manual. By keeping track of the instruments' responses from week to week, trends can be observed which would alert the operator of a potential problem, and to correct the situation before the instrument fails. Some minor but critical maintenance procedures are as follows:

29.9.2.1 Field BKGD Zero Tests

BAM-1022 units set up to monitor PM2.5 need to have the Background value field verified every 6 months using the BX-302 Zero Filter Calibration Kit. This test corrects the BKGD value to compensate for minor variations caused by local conditions. The test involves running the BAM in its normal operating environment with a zero filter on the inlet for at least 76 hours. The new Background will then be calculated and entered into the BAM. This test should not be performed during a period of rapidly changing weather. See Section 29.8.1.2 of this SOP for specific instructions.

29.9.2.2 Nozzle/Count Test Rate Test

The Nozzle/Count Test verifies that the monitor is beta counting correctly. To perform the test, press Test Menu, then Nozzle/Count Test. The nozzle must be in the down position for the beta counter to work. If it is not down press the NOZZLE button in the lower right corner. Press start to perform the test. The test will take 1 minute. The frequency of beta counts should be greater than 1000 Hz. This test should be performed on a monthly basis. For further instructions, see Section 3.4.10 of Met One Instruments, Inc. BAM-1022 Particulate Monitor Operation Manual.

29.9.2.3 Span Mass Audit

The span mass audit is used to verify the performance of the beta attenuation system. A zero and span foil will be required. To access the Span Mass go to Test Menu, then press the Span Mass Audit. When you enter this screen the nozzle will raise and you will be prompted to enter the zero calibration foil. **Note: Filter tape must be loaded for this test.**

Insert the zero foil above the tape between the nozzle and vane, with the label facing up. The nozzle will automatically detect the zero foil and lower on to the foil. The unit will start a four minute measurement. Once the four minutes is up the nozzle will raise and instruct you to remove the zero foil.

Once the foil has been removed, the display will show the span foil setting. Make sure this value matches the calibration certificate. If it does not match enter the correct value. Press the CONTINUE button. The display will instruct you to insert the span foil. Extra caution should be used to not touch the span foil. The nozzle will automatically detect the span foil and lower the nozzle and begin the four minute measurement cycle.

After the four minute measurement cycle has finished the display will change to show the results of the audit. If the error on the display is greater than +/- 5% the audit failed. This error can be

caused by filter tape movement during the insertion of the foils. Redo the test taking extra precaution to minimize tape movement. If the test continues to fail see section 6.6 and 6.7 of Met One Operation Manual.

29.9.2.4 Filter Sensor Testing

The BAM 1022 has four filter sensors that are all verified at a single point. The filter temperature and relative humidity sensors are tested with the pump running so that air flows across the sensors and provides ambient conditions to the sensor. The upper and lower pressure sensors are tested with the pump off so they will be at ambient conditions. The filter sensors should be verified once every 6 months and calibrated as needed. The Test Menu > Filter Sensor menu screen is used to verify/calibrate the filter sensors located in the air stream. **Note: The filter temperature and humidity sensors should never be calibrated if the inlet heater has been operating recently. The pump should be run for at least 2 hours after turning the inlet heater off before attempting to calibrate these sensors.**

29.9.2.4.1 Filter Temperature Sensor

Enter the Test Menu>Filter Sensor Menu. The pump will start and the screen will display the filter temperature sensor test interface first. If the inlet heater has not been running allow the pump to run for a minimum of 45 minutes to allow the sensor to fully equilibrate to ambient conditions. The nozzle should be in the up position. Place the temperature standard as close to the nozzle opening as possible. Allow 10 minutes for the standard to equilibrate while the pump is running. If the standard and the BAM are not within +/- 1°C, calibrate the sensor by touching the box next to the Standard on the screen and input the value form the standard. Press the CALIBRATE button in the bottom right corner.

29.9.2.4.2 Filter Relative Humidity Sensor

Enter the Test Menu>Filter Sensor Menu. The pump will start and the screen will display the filter temperature sensor test interface first. Tap the box on the screen next to Filter Sensor and choose the HUMIDITY option from the list. Press the OK button after selecting to exit to the Filter Sensor Menu. If the inlet heater has not been running allow the pump to run for a minimum of 45 minutes to allow the sensor to fully equilibrate to ambient conditions. The nozzle should be in the up position. Place the RH standard as close to the nozzle opening as possible. Allow 10 minutes for the standard to equilibrate while the pump is running. If the standard and the BAM are not within +/- 4%, calibrate the sensor by touching the box next to the Standard on the screen and input the value from the standard. Press the CALIBRATE button in the bottom right corner.

29.9.2.4.3 Filter Pressure Sensors

Enter the Test Menu>Filter Sensor Menu. The pump will start and the screen will display the filter temperature sensor test interface first. Tap the box on the screen next to Filter Sensor and choose the UPPER PRES option from the list. Press the OK button after selecting to exit to the Filter Sensor Menu. The nozzle should be in the up position. The pump will turn off after this selection. Place the barometric pressure standard as close to the nozzle opening as possible. If the standard and the BAM are not within +/- 5 mmHg, calibrate the sensor by touching the box next to the Standard on the screen and input the value from the standard. Press the CALIBRATE button in the bottom right

corner. Tap the box on the screen next to Filter Sensor and choose the LOWER PRES option from the list. The nozzle should be in the up position. Verify The pump is still off after this selection. Place the barometric pressure standard as close to the nozzle opening as possible. If the standard and the BAM are not within +/- 5 mmHg, calibrate the sensor by touching the box next to the Standard on the screen and input the value from the standard. Press the CALIBRATE button in the bottom right corner.

29.9.2.5 Internal Nozzle Cleaning

The inside of the sample nozzle should be periodically cleaned to remove particulate which may have settled on internal surfaces. This cleaning prevents a buildup of debris which could contaminate the the tape leading to an unwanted positive concentration bias.

If the unit is currently sampling go to the Operate Menu and select the Stop Sample option. Remove the PM-10 head assembly and the SCC. Remove the insulation around the inlet heater and loosen the set screw holding the heater in place. Remove the sample inlet tube out of the BAM-1022 inlet receiver.

Go to the Test Menu, and then select Tape Test to access the tape menu. Press the grey TEST TAPE button to advance the filter tape to a clean spot. Slide the canned air tube down the inlet receiver on the top of the BAM making sure the can of compressed air remains upright. Supply multiple short blasts of air while moving the canned air tube side to side.

Go to the Operate Menu and select Start Sample to start a new sample. Allow the pump to run for one to two minutes. Go to the Operate Menu and Select Stop Sample. Go to the Test Menu, and then select Tape Test to access the tape menu. Press the grey TEST TAPE button to advance the filter tape to inspect the sample spot. Repeat the above process until the sample spot is clean of debris.

Reinstall the inlet tube, inlet heater, heater insulation, and PM-10 head assembly and SCC before sampling resumes.

29.9.2.6 Pump

It is recommended that pumps be tested every 6 months, and rebuilt or replaced once every 2 years. Pumps may be rebuilt, but should be replaced after several rebuilds. The pump muffler should be cleaned or replaced once every 6 months.

29.9.3 Trouble Isolation

The instruments in Polk County Air Quality's air monitoring network are very reliable. However, after a period of continuous use problems may occur. Leaks in the system, dirt build up and pump failure are typical. After time, the operator should be able to quickly distinguish the symptoms and causes of equipment failure.

It is suggested that each station operator consult the **Met One Instruments Operator's Manual** and compile personal notes on troubleshooting as they gain experience with the BAM-1022. The operator is encouraged to contact the manufacturer when attempting any repairs.

The manufacturer's manual is the best resource the station operator has for the information on the operation and maintenance of the BAM-1022.

29.10 Quality Assurance (Accuracy-Audits)

Each of the operating BAM-1022 samplers will be audited once during each calendar quarter by the designated Quality Assurance Officer utilizing the procedures and calculations specified in 40 CFR 58, Appendix A, "Quality Assurance Requirements for State and Local Air Monitoring Stations (SLAMS)."

Perform audits as described by procedures outlined in Section 29.13.3.2, Temperature, Pressure and Flow Verifications, of this SOP. Table 29-1 below outlines the activities to be audited and their acceptable criteria. All steps are to be recorded on the "Audit Field Sheet" Form 1, Appendix A.

Audits should be conducted in the same way as the routine verifications performed once every fourteen days, with the following exceptions:

- Audits must be done using standards that are not used for routine calibrations and checks, and should be done by someone other than the routine operator. For example, a special BIOS Dry-Cal/BGI Tetra Cal are used for flow audits.

- The acceptance criteria for audits are listed in the Operational Evaluations section of the Redbook MQO tables and below in Table 29-1. However data should not be invalidated based on audit results alone. An investigation initiated by audit results that are outside the limits of relevant acceptance criteria, may point to other factors which require data invalidation.

- Flow audit results are uploaded to AQS. The flows that are uploaded to AQS are observed with the BIOS Dry-Cal or BGI Tetra Cal and its adapter in place. The actual flow is obtained from the audit standard. The indicated flow corresponds to the samplers own internal flow measurement device.

Table 29-1 Audit Activities and Acceptance Criteria

Activity	Acceptance Criteria
One Point Flow Rate Audit	See Audit Field Data Sheet
Ambient Temperature Sensor Audit	± 2°C of Standard
Ambient Pressure Sensor Audit	± 10 mm Hg
External Leak Audit	< 1.0 LPM

29.11 Data Quality Assessment

For each calendar quarter and year, Polk County Air Quality will prepare data precision, accuracy and completeness reports for the Iowa Department of Natural Resources (Iowa DNR) and EPA-Region 7 in accordance with the current Letter of Agreement (LOA).

29.11.1 Precision

The precision for the BAM-1022 PM2.5 will be evaluated and reported employing the frequencies, procedures and calculations outlined in the Code of Federal Regulations and current EPA guidance documents.

29.11.2 Accuracy

The accuracy will be evaluated and reported for the BAM-1022 PM2.5 using results from the performance audits and the calculations outlined in the Code of Federal Regulations and current EPA guidance documents.

29.11.3 Data Completeness

The completeness of the data will be determined for each monitoring instrument and expressed as a percentage. Percent valid data will be a gauge of the amount of valid data obtained from the monitoring instrument, compared to the amount expected under ideal conditions, or which were discontinued prior to the end of any reporting period for calculation purposes.

29.12 Calibrations-Temperature, Pressure and Flow

Prior to performing a calibration or any maintenance procedures, “as found” conditions need to be determined and recorded for: leak check, flow, temperature and pressure.

See Section 29.8.1.1 to determine the “as found” leak check rate.

If any maintenance is performed, another leak check must be performed prior to calibration procedures, see Section 29.8.1.1.

To proceed with the calibration, on the BAM-1022, go to Test Menu then press the Ambient Temperature to access the Ambient Temperature calibration screen. The BAM-1022 Temperature will be displayed. Measure the ambient temperature with the reference standard positioned near the 597 ambient temperature, relative humidity and pressure probe. Press the grey DEFAULT button to remove any previous offsets. Press the green bordered box and enter to enter the value from the reference standard into the Standard field. Press the OK button in the bottom right corner to correct the BAM reading. The BAM-1022 and Standard values should now be the same. Press the X in the top right corner to return to the Test Menu.

Press the Ambient Pressure to access the Ambient Pressure calibration screen. The BAM-1022 Ambient Pressure will be displayed. Measure the ambient pressure with the reference standard positioned near the 597 ambient temperature, relative humidity and pressure probe. Press the grey DEFAULT button to remove any previous offsets. Press the green bordered box and enter to enter the value from the reference standard into the Standard field. Press the OK button in the bottom right corner to correct the BAM reading. The BAM-1022 and Standard values should now be the same. Press the X in the top right corner to return to the Test Menu.

After the temperature and pressure readings are correct, remove the PM10 head assembly and the PM2.5 SCC, and install the BIOS or BGI reference flow meter onto the inlet. Press the Flow Calibration to access the flow calibration screen. The pump will turn on automatically and adjust the flow to 16.7 lpm test point. Press the green bordered box next to Set Point and press the 14.0 lpm selection and hit the OK button. The display will return to the Flow Calibration screen. Allow the unit to regulate the flow until the BAM reading stabilizes at the target flow rate for at least one minute. Press the grey DEFAULT button to remove any previous offsets. Press the green bordered box next to the Standard and enter the reading from the flow transfer standard and press OK. The display will return to the Flow Calibration screen. Press the SET button in the bottom right corner.

Press the green bordered box next to Set Point and press the 17.5 lpm selection and hit the OK button. The display will return to the Flow Calibration screen. Allow the unit to regulate the flow until the BAM reading

stabilizes at the target flow rate for at least one minute. Press the green bordered box next to the Standard and enter the reading from the flow transfer standard and press OK. The display will return to the Flow Calibration screen. Press the SET button in the bottom right corner.

Press the green bordered box next to Set Point and press the 16.7 lpm selection and hit the OK button. The display will return to the Flow Calibration screen. Allow the unit to regulate the flow until the BAM reading stabilizes at the target flow rate for at least one minute. Press the green bordered box next to the Standard and enter the reading from the flow transfer standard and press OK. The display will return to the Flow Calibration screen. Press the CALIBRATE button in the bottom right corner. Press the X in the top right corner to return to the Test Menu.

Note: The DEFAULT key can be pressed to reset the user calibration for the selected parameter and replace it with a factory setting at any time. By pressing the DEFAULT key in the Flow Calibration Screen it will remove the user calibration for all three flow settings.

Exit the calibration menu. The BAM-1022 is now ready to start sampling.

NOTE: To start sampling, press the Menu Icon in the top left corner of the screen. Select Operate Menu then press Start Sample. In most cases the BAM will typically start sampling immediately upon start up or at the beginning of the next measurement cycle.

29.13 Sampler Operations

This section describes the routine field operations for the Met One Instruments BAM-1022.

29.13.1 Quality Control

29.13.1.1 Leak Check

Perform a leak check at least once every 14 days or as needed. There is a 1.0 LPM leak flow allowance due to the factory test conditions. With the inlet shut off, the vacuum in the system is very high, about 21 inHg. This is 10 times greater than what the BAM will encounter during normal sampling. If the flow reading during this test is 1.0 LPM or less, there will not be a significant leak during normal operation. A leak check value between 0.7 – 1.0 LPM still passes, but indicates the potential of a leak check failure in the near future. If an as-found leak value shows a flow between 1.0 – 1.5 LPM, this may result in the invalidation of data back to the last successful leak check. If an as-found leak value is measured at greater than 1.5 LPM, data will be invalidated back to the last successful leak check.

29.13.1.2 Temperature Verification

Perform an ambient temperature verification at least once every 14 days or as needed. Sampler measured (current) temperature must be within ±2°C of the temperature measured by an external transfer standard. Failure to meet the ±2°C criteria may result in the invalidation of data back to the last successful temperature verification.

29.13.1.3 Pressure Verification

Perform an ambient pressure verification at least once every 14 days or as needed. Current ambient pressure must be within ±10 mmHg of actual ambient pressure. Failure to meet this criteria may result in the invalidation of data back to the last successful pressure verification.

Converting inHg to mmHg: inHg x 25.4 = mmHg

29.13.1.4 Flow Check

Perform flow rate verification at least once every 14 days or as needed. A 1-point flow verification is subjected to the following 3 checks:

- Percent difference from "Current":
  [(Current-Actual)/Actual] x 100 < ±4%

- Percent difference from sampler set flow:
  [(Set Flow (16.70) -Actual)/16.7] x 100 < ±5%

- Percent difference between sampler set flow and current flow:
  [(Set Flow (16.70) -Current)/16.7] x 100 < ±2%

Failure to meet any of these criteria will result in the invalidation of data back to the last successful flow verification.

29.13.1.5 Maintenance

See Chapter 6 in the BAM 1022 Particulate Monitor Operation Manual, BAM-1022-9800 Rev C. Met One Instruments, Inc. 2015.

Table 29-2 summarizes the calibration, verification and maintenance frequencies.

Table 29-2 Verification, Calibration and Maintenance Check Intervals

Activity	Frequency	Acceptance Criteria
Ambient Temperature verification	14 days from previous check	± 2°C of Standard
Ambient Temperature Calibration	As needed or at least 1/month	± 2°C of Standard
Ambient Pressure Verification	14 days from previous check	± 10 mm Hg
Ambient Pressure Calibration	As needed or at least 1/month	± 10 mm Hg
Leak Check	14 days from previous check	<1.0 LPM
Self Test	14 days from previous check	
Span Mass Audit	As needed or at least 1/month	5%
Filter Temperature Sensor	Verify 1/6 months, calibrate as needed	± 1°C of Standard
Filter Relative Humidity Snesor	Verify 1/6 months, calibrate as needed	±4% of Standard
Filter Pressure Sensors	Verify 1/6 months, calibrate as needed	± 5 mm Hg
Change Coin Battery	1/year	
Background Zero Check	As needed or at least 1/6 months	
Replace pump muffler	As needed or at least 1/6 months	
Clean/Replace internal debris filter	1/year	
Clock verification	1/month	30 Seconds
Cleaning of SCC	1/4 Weeks	
Replace Filter Tape	As needed or at least 1/60 days	
Disassemble, Inspect and Clean PM10 Inlet	1/4 Weeks	
Clean and empty water collection jar	As needed or at least every 14 days	
Clean Nozzle and Vane	1/4 Weeks	

29.13.2 Procedures

New station operators will be provided with on-site training by an experienced operator before they operate a station on their own. The following procedures are intended to assist the operator in performing and documenting monitoring procedures. Monitoring personnel must become familiar with the Met One Instruments BAM-1022 Particulate Monitor Operation Manual.

Included are the steps involved in an every 14 day verification. The following materials are required:

- BAM-1022 central unit
- PM10 FRM inlet (BX-802)
- PM2.5 Sharp Cut Cyclone (SCC) inlet
- Smart Heater (BX-830)
- Filter tape
- Ambient temperature, relative humidity and pressure sensor (597)
- Leak Check filter (BX-302)
- NIST traceable flow meter (flow standard)
- NIST traceable barometer (pressure standard)
- NIST traceable thermometer (temperature standard)
- USB Flash storage drive
- Field sheets
- Station logbook
- Isopropyl Alcohol
- Cotton swabs
- Small flashlight
- Can of Compressed Air

29.13.314 day Verifications

At a minimum, perform verifications and leak checks at the frequency listed in the Quality Control Section 29.13.1 of this SOP.

29.13.3.1 Ambient Temperature, Ambient Pressure and Flow Verifications

It is important that you do not interrupt the sample flow until after you have performed the as-found flow check. Therefore the flow verification **MUST** precede a leak check.

On the touch screen of the BAM, the home screen should be up. This screen displays the current Flow Statistics as well as the hourly and real-time concentrations. Press the down arrow on the screen until ambient temperature (AT) and barometric pressure (BP) are displayed on the screen.

Measure the ambient temperature with the reference standard positioned near the 597 ambient temperature relative humidity and pressure probe. Compare the BAM-1022 temperature value listed next to the “AT” column to reference standard.

Measure the barometric pressure with the reference standard positioned near the 597 ambient temperature relative humidity and pressure probe. Compare the BAM-1022 pressure value listed next to the “BP” column to reference standard.

After the temperature and pressure readings are obtain, remove the PM10 head assembly and the PM2.5 SCC from the inlet tube and install the BIOS or BGI reference flow meter onto the inlet. Press the up arrow on the screen until Flow is displayed on the Home screen. Compare the BAM-1022 flow value displayed for FLOW RATE to reference standard. All steps are to be recorded on the "Verification Field Sheet" Form 3, Appendix A

Flow verification results are uploaded to AQS. The flows that are uploaded to AQS are observed with the BIOS Dry-Cal or BGI Tetra Cal and its adapter in place. The actual flow is obtained from the transfer standard. The indicated flow corresponds to the samplers own internal flow measurement device.

Note: If a problem is recognized while performing any maintenance, diagnostic, external, or internal checks which has or could affect data a corrective action form is to be filled out describing the problem identified and the action taken to correct the problem. All information should be recorded on a "Corrective Action Form" Form 4, Appendix A.

29.13.3.2 Leak Checks

Go to the Test Menu then to Tape Test. Advance the tape to a fresh, unused spot by pressing the grey button on screen labeled TEST TAPE.

Remove the PM10 head assembly and the PM2.5 SCC from the inlet tube and install BX-302 leak test valve onto the inlet tube. Turn the valve to the OFF position to prevent any air from entering the inlet tube.

Verify the nozzle is in the down position. If it is not pres the nozzle control button to lower it.

Press the grey pump control in the lower left corner to turn the pump on. The flow rate should drop below 1.0 LPM. If the leak value is greater than 1.0 LPM, then the nozzle and vane may need cleaning, or there may be another leak in the system.

If the source of the leak is not obvious, remove the tape and use the rubber nozzle seal (part #7440) to isolate the cause of the leak, see Section 6.3 of the Operator's Manual. The side with the hole can be used to check the airflow pathway between the pump and the leak check valve, while eliminating leakage due to the tape. The solid side will check only the portion below the support vane. Following these procedures, a calibration must be performed, see Section 29.12.

29.13.3.3 Clock Verification

Compare the date and time of the BAM-1022 clock display to the data logger date and time display. If either the date or time of the BAM-1022 does not agree with the data logger, correct the BAM-1022 to match the data logger. Clock drift indicates a problem may exist with the contact closure relay configuration. If the clocks disagree by more than 30 seconds, troubleshoot the contact closure hardwiring and configuration that controls the clock synchronization signals. Diagnose and correct.

29.13.4 Monthly Maintenance Procedures

29.13.4.1 Maintenance of the Sharp Cut Cyclone (SCC)

Figure 29-3 is a schematic drawing showing the Sharp Cut Cyclone (SCC). The SCC is designed and manufactured by BGI Incorporated. Recommended cleaning materials include mineral free water and lint free lab wipes.

To Disassemble a BGI SCC: remove the SCC from its installed position in the instrument. Pull off the side transfer tube. If it is too tight to remove by hand, pry it off with a rigid plastic lever. Care should be taken to not damage the two "O" ring seals. Remove the top cap and grit pot by unscrewing. Wet a lint free wipe with water and remove all visible deposits. These are most likely to be found at the bottom of the cone and inside the grit pot. Inspect all "O" rings for shape and integrity. If at all suspect, replace. Lubricate all "O" rings with light grease. It is important to well lubricate the transfer tube to avoid difficult disassembly. Assemble in reverse order and reinstall.

29.13.4.2 Maintenance of the PM10 Head Assembly

Figure 29.4 is a schematic drawing showing the PM10 head assembly. The inlet is designed to remove particles with aerodynamic diameter greater than 10 μm and to send the remaining smaller particles to the next stage. The design flow rate through the inlet is 16.7 liters per minute.

29.13.4.2.1 Maintenance of the Top Acceleration Assembly

Mark the top plate deflector cone and lower plate with a pencil scribe to facilitate proper orientation for easier reassembly after cleaning and maintenance. Using a Phillips blade screwdriver, remove the four pan head screws from the top of the top plate, and lift the top plate off the four threaded spacer standoffs and set aside. Inspect the insect screen for contamination and clean by lifting the screen off the lower plate rain deflector and brush or rinse with water until clean. Dry and reinstall. Using a general purpose cleaner and paper towel, clean the top plate deflector cone and internal wall surface of the acceleration assembly. Be sure that after cleaning is complete, the acceleration nozzle is clean. If not, use a cotton swab and cleaner to remove contamination. Inspect the large diameter impactor nozzle O-ring for wear. Replace if necessary, or using a light coating of silicone grease, apply a thin film on the O-ring itself; and likewise a small light coating on the aluminum threads of the acceleration assembly. After reinstalling the bug screen, align the top plate markings with the lower plate markings. The four holes in the top plate should align with the four spacer standoffs. Insert and tighten securely the four pan head screws.

Figure 29-3: Schematic Drawing of the Air Flow through a Sharp Cut Cyclone

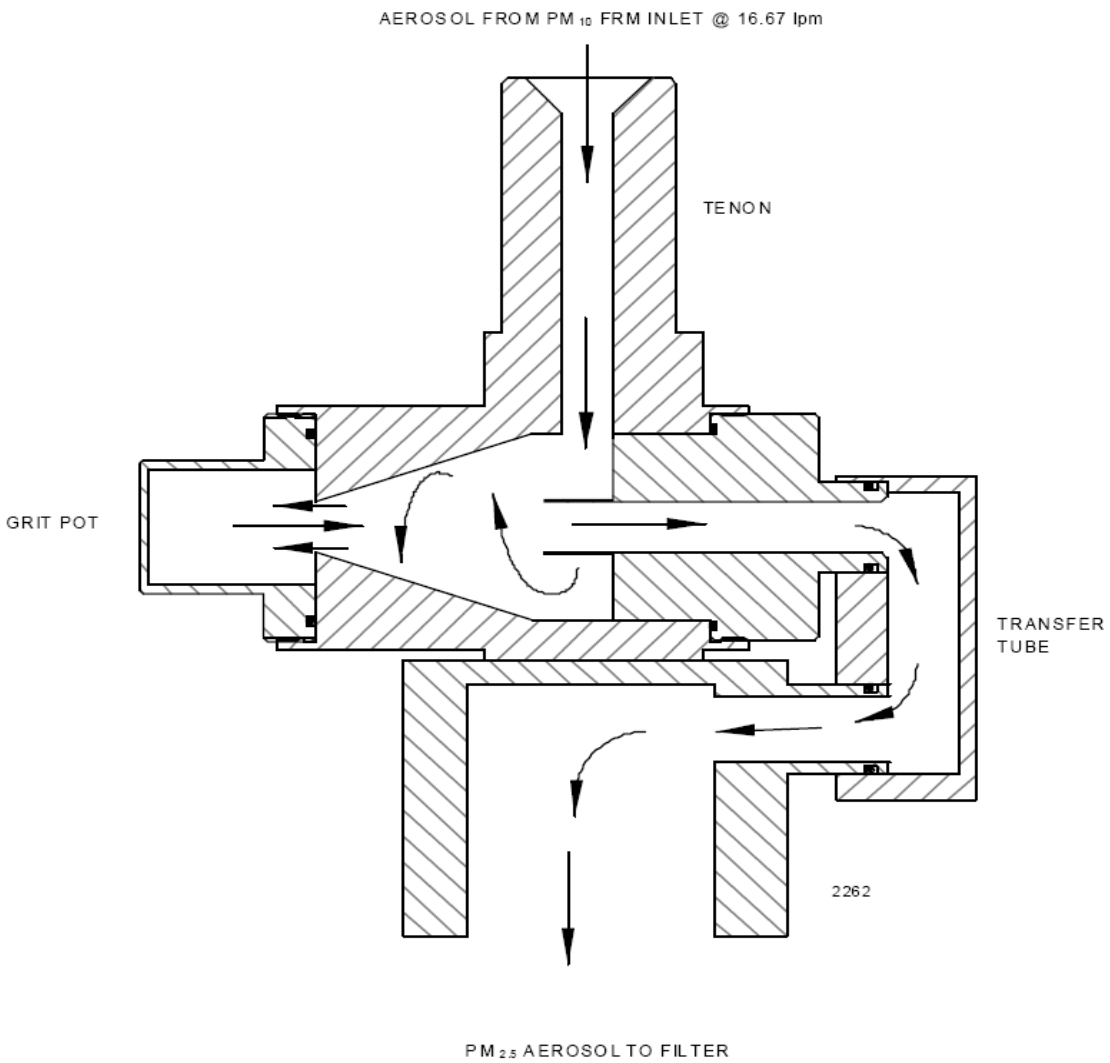

Figure 29-4: Exploded Cross-Sectional View of PM10 Head Assembly

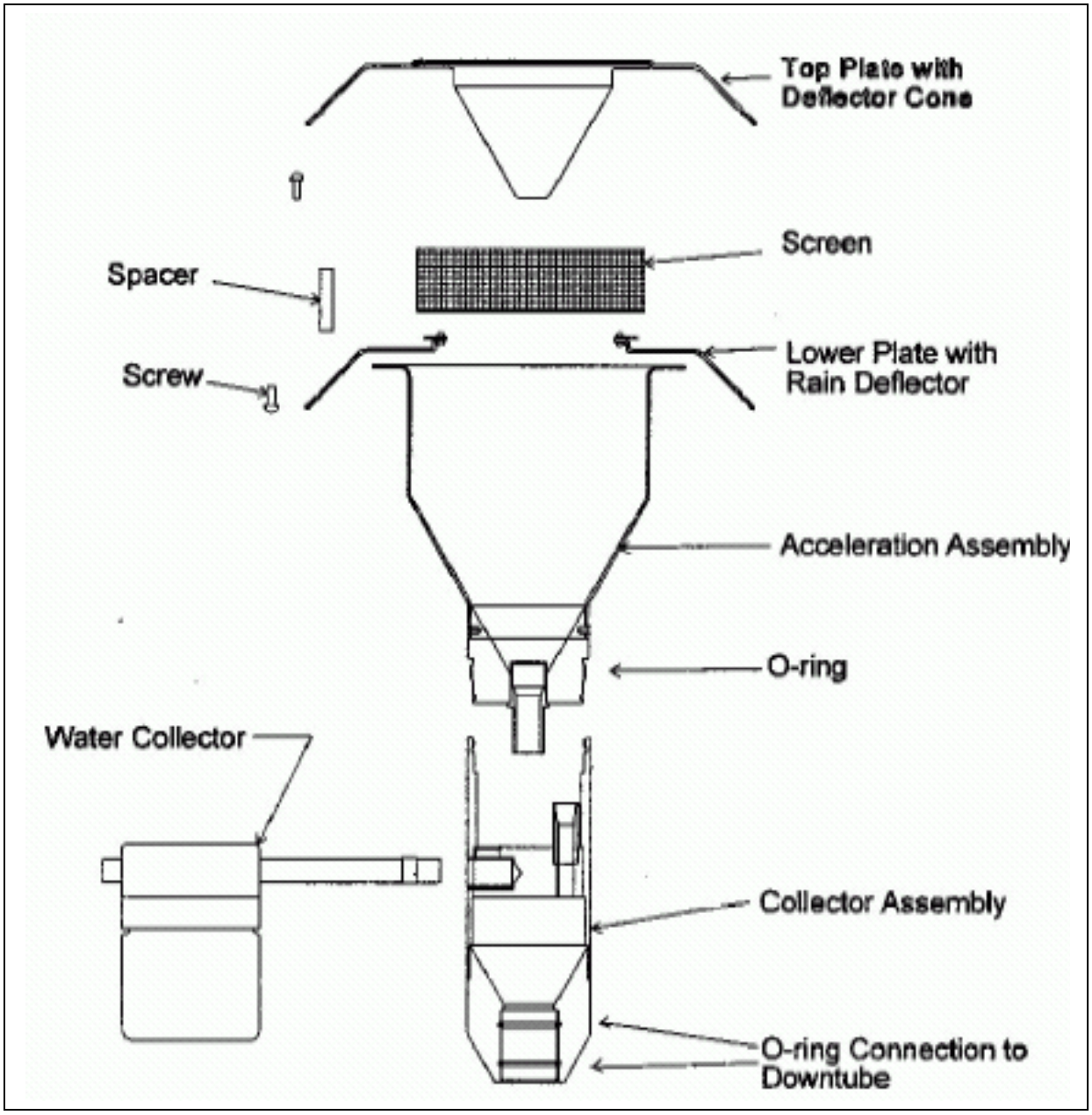

29.13.4.2.2 Maintenance of the Lower Collector Assembly

It is on the collector plate that most of the contamination in the inlet is found. The threads should be cleaned to facilitate a tight seal when the two halves are reassembled. Follow the steps below to clean the lower collector assembly:

Using a general purpose cleaner with a paper towel, clean the collector assembly walls and the three vent tubes. A cotton swab may be necessary to clean these vent tubes. Likewise, clean the bottom side of the collector assembly. Using a cotton swab, also

clean the weep hole in the collector plate where the moisture runs out to the moisture trap. Remove the water collection jar and clean. The water collection jar should be cleaned and emptied out every 14 days. Inspect the brass nipple fitting to ensure tightness and non-blockage. When reinstalling the rain jar, place a light coating of silicone grease on the gasket inside the cap of the rain jar. This will ensure a leak-free fit. Inspect the two inlet-to-inlet tube sealing O-rings for wear. Replace if necessary. Use a light coating of silicone grease on these O-rings to ensure that a seal is made when reinstalled on the 1 ¼" OD sampler tube.

29.13.4.2.3 Reassemble and Reinstallation of Inlet

Reassemble the top and bottom inlet assemblies until the threads tighten. Hand-tighten only. Carefully place the inlet back on top of the 1 ¼" OD sample tube. Take care not to damage the internal O-rings. The performance verification and maintenance is now complete. Replace the PM10 1st stage inlet on top of the SCC on the sample tube by pressing down until it hits a stop.

29.13.5 Maintenance of the Nozzle and Vane

Over time, a gradual build-up of filter tape debris and particulate may accumulate on the nozzle and vane sealing surfaces, creating air leaks or even punching small holes in the filter tape. This will cause measurement errors. The nozzle and vane must be cleaned at a minimum of once every 4 weeks as a preventative measure.

On the BAM-1022 go to the Test Menu and select the Leak Test Menu. Raise the nozzle and remove the filter tape from the nozzle area. It is not necessary to completely remove the tape from the unit. With the nozzle up, use a small flashlight to inspect the nozzle and vane. Clean the nozzle and vane with a cotton-tipped applicator and isopropyl alcohol. Allow the alcohol to dissolve the hardened deposits. Take extra precaution to keep deposits from falling through the vane holes and onto the detector. If debris falls through the vane carefully clean the cavity with a blast of compressed air.

Reinsert the filter tape. Run a "Test Tape" as described in Section 29.6.2.3 of this SOP to make sure the filter tape was installed correctly.

29.14 Retrieving BAM-1022 Internal Data

A USB flash drive is all that is needed to download the internal data from the BAM-1022. The drive must be installed in the USB port located on the front of the unit, in the upper left corner of the tape transport.

To download the data, plug a USB flash drive into the port. Go to the Operate Menu, then select the Transfer Data. There are two fields in this screen. The first is the Days field. Press the green bordered box next to the Days. Enter the number of days of data to download and press OK.

The second field is the Files field. There are two file types. The USER files are for all routine data collection purposes. The ALL files type contains additional encrypted factory diagnostic data. This data is only used when it is being sent to Met One for factory support. Tap on the desired data file type and press OK.

Press the grey COPY button in the bottom left corner to copy the selected data to the USB flash drive. Copying is complete when the display reads COPY COMPLETE.

29.15 AQS Data Validation

BAM continuous hourly data will be uploaded to AQS on a monthly basis within 15 days upon the completion of a calendar month. The concentrations used to create AQS strings will be obtained from the files downloaded from the BAM-1022.

Comma separated files, with hourly concentrations and associated flags, will be downloaded from the internal memory on the BAM-1022 and imported into the AirVision database. For more information on this topic refer to SOP 18 AirVision. AQS strings will be created from the imported data in the database.

APPENDIX A-Critical Forms and Field Sheets

Form 1……..……BAM-1022 PM2.5 Audit Field Sheet
Form 2…….BAM-1022 PM2.5 Monthly Calibration Field Sheet
Form 3…….BAM-1022 PM2.5 Verification Field Sheet
Form 4……..……Corrective Action Form

Form 1: BAM-1020 PM2.5 Audit Field Sheet

BAM-1022 PM2.5 AUDIT SHEET

Site Name: _____ **Date:** _____
Site Location: _____ **Time:** _____
Technician's Name: _____ **Serial #:** _____
Observer's Name: _____ **Sampler Model:** **BAM-1022**

1). As Found Flow Audit:

Set Point	Sampler	Actual
16.70		
(Sampler - Actual) x 100 / Actual		≤ 4%
(16.70 - Actual) x 100 / 16.70		≤ 5%
(16.70 -Sampler) x 100 / 16.70		≤ 2%
Perform a flow calibration if the % difference is greater than 2%.		

2). As Found Leak Check:

	Pass or Fail ≤ 1.0 LPM	Indicated LPM
Leak Check		
If leak check passes, proceed with verication. If leak cheak fails, clean nozzle and vane and perform calibration.		

3). As Found Temp. (AT) Audit:

	Sampler	Actual	
Amb Temp (°C)			≤ 2°C
Perform a temperature calibration if sampler and actual temperatures are not within limits.			

4). As Found Pressure (AP) Audit:

	Sampler	Actual	
Amb Pressure			≤ 10 mmHg
Perform a pressure calibration if sampler and actual pressures are not within limits.			

	Manufacturer	Model	Serial Number	Certification Date
Temperature Reference	Cole Palmer	91100-20		
Pressure Reference	CE	Hand Held		
Flow Standard	Bios	D		

Comments: _____

Form 2: BAM-1022 PM2.5 Monthly Calibration Field Sheet

BAM-1022 PM2.5 CALIBRATION SHEET

Site Name: _____ **Date:** _____
Site Location: _____ **Time:** _____
Technician's Name: _____ **Serial #:** _____
Observer's Name: **Sampler Model:** **BAM-1022**

1). As Found Checks	Sampler	Actual	Difference
Flow Set Point 16.70			≤ 4%
Leak Check			≤ 1 LPM
Ambient Temp (°C)			≤ 2 °C
Ambient Pressure			≤ 10 mmHg

2). General Maintenance	Yes or No
Cleaned Nozzle & Seal (1/month)	
Cleaned SCC (1/month)	
Cleaned PM10 Head (1/month)	
Replaced Filter Tape (1/60 days)	
Self Test Passed	
Count Test Greater Than 1000 Hz	

3). Span Mass Audit		
Span Mass .749	BAM Reading	% Diff
% difference should be less than 5%. If it fails redo test and minimize tape movement		

4). As Left leak Check:	Pass or Fail ≤ 1.0 LPM	Indicated LPM
Leak Check		
Almost all leaks occur at the nozzle where it contacts the filter tape. Clean nozzle and repeat leak check. If problem persists, refer to Operator's Manual.		

5). Temperature (AT) Calibration:	Sampler	Actual	
Amb Temp (°C)			≤ 2°C
Repeat Calibration if sampler and actual temperatures are not within limits.			

BGI Tetra Cal Serial	Recertification Date

6). Pressure (AP) Calibration:	Sampler	Actual	
Amb Pressure			≤ 10 mmH
Repeat Calibration if sampler and actual pressures are not within limits.			

7). Flow Calibration:		
Pre-Calibraton		
Set Point	**Sampler**	**Actual**
14.00		
17.50		
16.70		
Post-Calibration		
Set Point	**Sampler**	**Actual**
14.00		
17.50		
16.70		
Set Point: 14.00		
(Sampler - Actual) x 100 / Actual		≤ 2%
(14.00 - Actual) x 100 / 14.00		≤ 5%
(14.00 - Sampler) x 100 / 14.00		≤ 2%
Set Point: 17.50		
(Sampler - Actual) x 100 / Actual		≤ 2%
(17.50 - Actual) x 100 / 17.50		≤ 5%
(17.50 - Sampler) x 100 / 17.50		≤ 2%
Set Point: 16.70		
(Sampler - Actual) x 100 / Actual		≤ 2%
(16.70 - Actual) x 100 / 16.70		≤ 5%
(16.70 - Sampler) x 100 / 16.70		≤ 2%
Repeat flow calibration if the % difference is greater than the specified range.		

8). As Left Self Test	

Form 3: BAM-1022 PM2.5 Verification Field Sheet

BAM-1022 PM2.5 VERIFICATION SHEET

Site Name: _____ **Date:** _____
Site Location: _____ **Time:** _____
Technician's Name: _____ **Serial #:** _____
Observer's Name: _____ **Sampler Model:** **BAM-1022**

1). As Found Flow Verification:

Set Point	Sampler	Actual
16.70		
(Sampler - Actual) x 100 / Actual		≤ 4%
(16.70 - Actual) x 100 / 16.70		≤ 5%
(16.70 -Sampler) x 100 / 16.70		≤ 2%
Perform a flow calibration if the % difference is greater than 2%.		

2). As Found Leak Check:

	Pass or Fail ≤ 1.0 LPM	Indicated LPM
Leak Check		
If leak check passes, proceed with verication. If leak cheak fails, clean nozzle and vane and perform calibration.		

3). As Found Temp. (AT) Verification:

	Sampler	Actual	
Amb Temp (°C)			≤ 2°C
Perform a temperature calibration if sampler and actual temperatures are not within limits.			

4). As Found Pressure (AP) Verification:

	Sampler	Actual	
Amb Pressure			≤ 10 mmHg
Perform a pressure calibration if sampler and actual pressures are not within limits.			

	Manufacturer	Model	Serial Number	Recertification Date
Temperature Reference				
Pressure Reference				
Flow Standard				

Comments: _____

Form 4: Corrective Action Form

Polk County Air Quality - Corrective Action Form

To: _____ Polk County Air Quality _____
(position)

From: _____

Copies of completed form to: AQ Supervisor, File

Urgency: ☐ Emergency (immediate action needed) ☐ Urgent (24 Hr.)
☐ Routine (7 days) ☐ Next scheduled visit ☐ Information only

Problem Identification:

Site: _____
System: _____
Date: _____

Description of Problem: _____

Recommended Action: _____

Signature of Initiator: _____ Date: _____

Problem Resolution:

Date of Corrective Action: _____

Summary of Corrective Action: _____

Result of Corrective Action: _____

Signature of resolver: _____ Date: _____

Signature of QA Officer: _____ Date: _____