MIDLAND®

XT511 Owner's Manual

www.midlandradio.com

TABLE OF CONTENTS 3

Introduction	4
Important Notice, FCC Licensing	5
LCD Display	6
Controls	7
Battery Installation	8
Installing the Shoulder Strap	8
Charging the Battery Pack	9
Low Battery Level Indicator	9
Selecting the Power Source	9
Operating Your Radio	10 - 17
External Speaker/Microphone Jack	17
USB Jack	17
Troubleshooting Guide	18
Use and Care	18
Specifications and Frequency Charts	19 - 20
Warranty Information	21
MIDLAND Family Products	22
Accessories	22 - 24
Accessories Order Form	25

Welcome to the world of Midland electronics

Congratulations on your purchase of a high quality MIDLAND product. Your 2-way radio represents the state-of-the-art in high-tech engineering. Designed for GMRS (General Mobile Radio Service) operation, this compact package is big in performance. It is a quality piece of electronic equipment, skillfully constructed with the finest components. The circuitry is all solid-state and mounted on a rugged printed circuit board. Your two-way radio is designed for reliable and trouble-free performance for years to come.

Features

- 22 GMRS/FRS Channel
- 121 Privacy Codes (38 CTCSS / 83 DCS)
- AM/FM Receiver
- VOX
- Selectable Call Alert
- NOAA Weather Radio
- NOAA Weather Alert
- Scan Function
- MONITOR Function
- Dual Watch Function
- Roger Beep Tone
- Silent Operation
- Keypad Lock
- Power HI/LO Settings
- Flashlight
- Clock/Alarm Clock Function
- Dynamo Crank Battery Charge Capability
- USB Jack (For Mobile Phone Charging)
- Speaker / Microphone Jacks
- Battery Meter / Battery Low Indicator

This device complies with Part 15 of the FCC Rules. Operation is subject to the following two conditions : (1) this device does not cause harmful interference, and (2) this radio must accept any interference that may cause undesired operation.

To maintain compliance with FCC's RF exposure guidelines, for body-worn operation, this radio has been tested and meets the FCC RF exposure guidelines when used with Midland Radio Corp. accessories supplied or designated for this product. Use of other accessories may not ensure compliance with FCC RF exposure guidelines. (Tested with Headset Model: AVP-1)

IMPORTANT NOTICE, FCC LICENSE REQUIRED FOR GMRS OPERATION

The XT511 Series operates on GMRS (General Mobile Radio Service) frequencies which require an FCC (Federal Communications Commission) license. You must be licensed prior to operating on channels 1 - 7 or 15 - 22, which comprise the GMRS channels of the XT511 Series. Serious penalties could result for unlicensed use of GMRS channels, in violation of FCC rules, as stipulated in the Communications Act's Sections 501 and 502 (amended).

You will be issued a call sign by the FCC which should be used for station identification when operating the radio on GMRS channels. You should also cooperate by engaging in permissible transmissions only, avoiding channel interference with other GMRS users, and being prudent with the length of their transmission time.

To obtain a license or ask questions about the license application, contact the FCC at 1-888-CALL FCC or go to the FCC's website:
http://www.fcc.gov and request form **605**.

Exposure To Radio Frequency Energy

Your Midland radio is designed to comply with the following national and international standards and guidelines regarding exposure of human being to radio frequency electromagnetic energy:

- United States Federal Communications Commission, Code of Federal Regulations: 47 CFR part 2 sub-part J
- American National Standards Institute (ANSI)/Institute of Electrical & Electronic Engineers (IEEE) C95. 1-1992
- Institute of Electrical and Electronic Engineer (IEEE) C95. 1-1999 Edition
- National Council on Radiation Protection and Measurements (NCRP) of the United States, Report 86, 1986
- International Commission on Non-Ionizing Radiation Protection (ICNIRP) 1998

To control your exposure and ensure compliance with the general population or uncontrolled environment exposure limits, transmit no more than 50% of the time. The radio generates measurable RF energy exposure only when transmitting.

IMPORTANT: Changes or modifications to this unit not expressly approved by **MIDLAND RADIO CORP.** could void your right to operate this unit. Your radio is set up to transmit a regulated signal on an assigned frequency. It is against the law to alter or adjust the settings inside the COMMUNICATOR to exceed those limitations. Any adjustment to your radio must be made by qualified technicians.

LCD DISPLAY

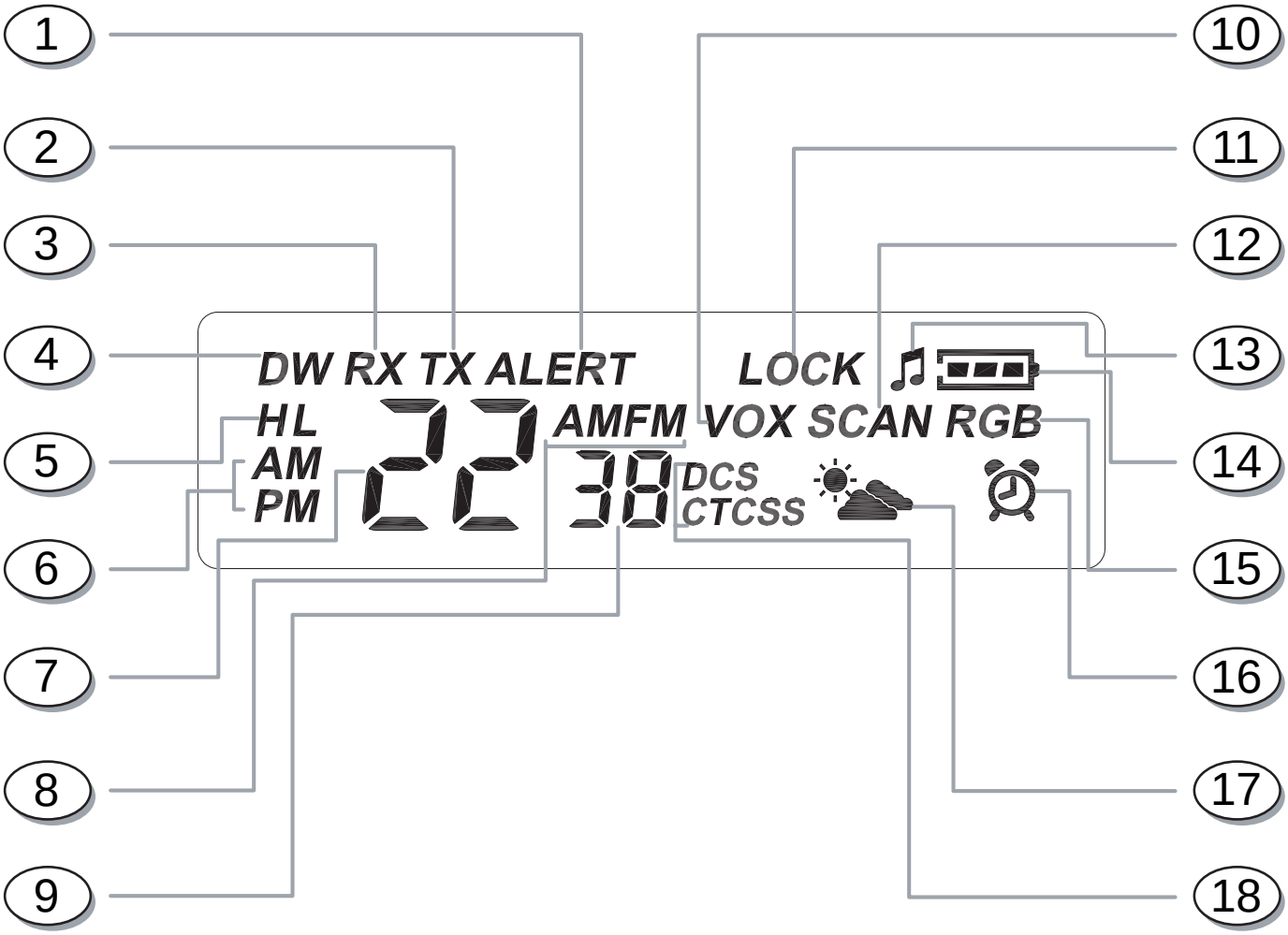

1. **NOAA WEATHER (WX) ALERT ICON** – Indicates the NOAA Weather Alert function is on.
2. **TRANSMIT (TX) ICON** – Indicates radio is transmitting a signal.
3. **RECEIVE (RX) ICON** – Indicates radio is receiving a transmission.
4. **DUAL WATCH ICON** – Indicates the Dual Watch function is on.
5. **TRANSMIT POWER LEVEL ICON** – Indicates TX Power setting (H/L)
6. **CLOCK AM/PM ICON** – Indicates the clock is set in AM or PM.
7. **CHANNEL NUMBER** – Changes from 1~22 on GMRS/FRS band (1~7 on WX band). This is also used to indicate in part the current AM/FM receiver frequency setting and the current clock setting.
8. **AM/FM RECEIVER ICON** – Indicates radio is in AM or FM receiver mode.
9. **PRIVACY CODE** – Indicates Privacy Code selected by user (oF~38/oF~83). This 2 digit readout is also used to display AM/FM receiver frequency and for the clock function.
10. **VOX ICON** – Indicates when VOX mode is active.
11. **KEY LOCK ICON** – Indicates KEY LOCK mode is on.
12. **SCAN ICON** – Indicates when the radio is in Scan mode.
13. **KEY TONE ICON** – Indicates radio's Key Beep Tone is on.
14. **BATTERY METER** – Indicates the battery level.
15. **ROGER BEEP ICON** – Indicates radio's Roger Beep Tone is on.
16. **ALARM CLOCK ICON** – Indicates when the Alarm Clock is on.
17. **NOAA WEATHER (WX) BAND ICON** – Indicates when the radio is in Weather Band mode.
18. **PRIVACY CODE ICON** – Indicates Privacy Code setting (CTCSS/DCS).

CONTROLS

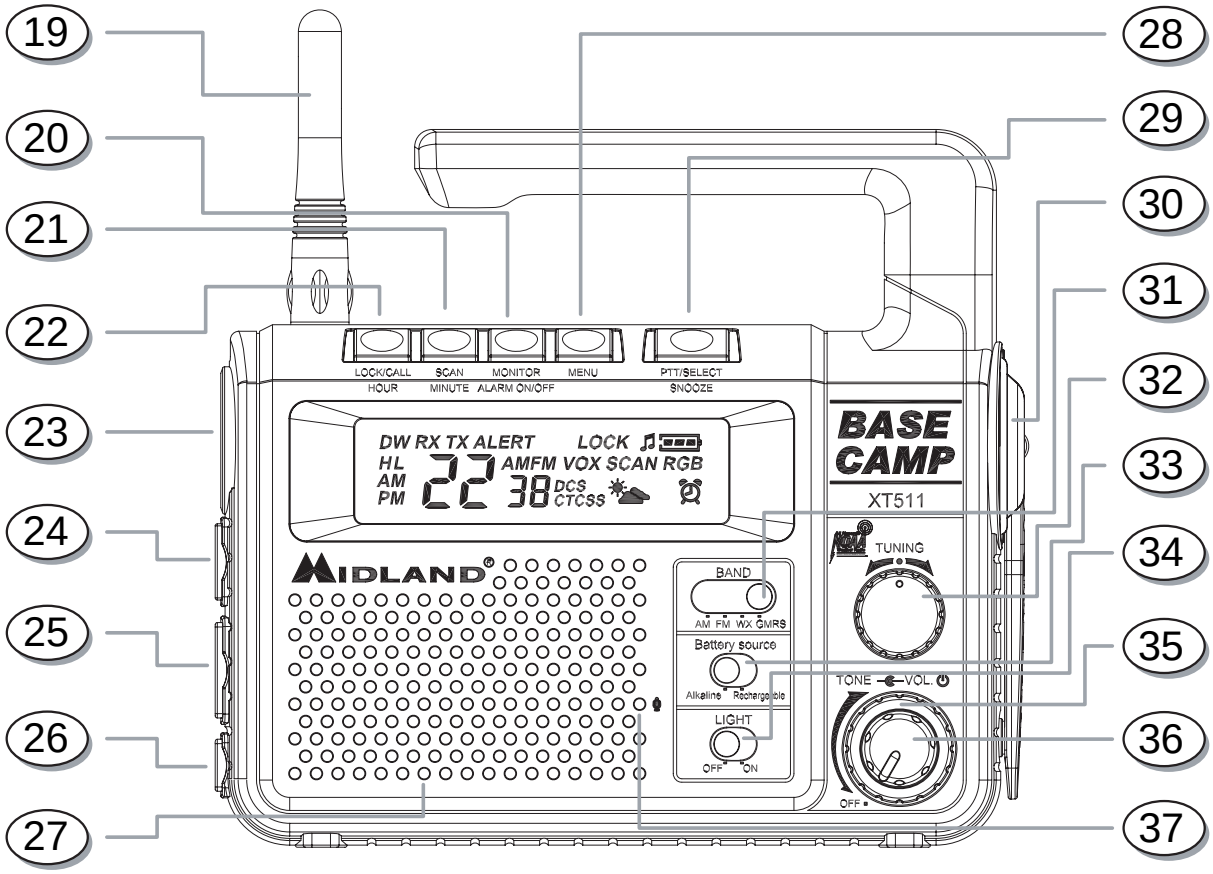

19. ANTENNA

20. MONITOR / ALARM ON/OFF Button – Press to turn on the Monitor function in GMRS mode. Press and hold to turn alarm on/off in Clock mode.

21. SCAN/MINUTE Button – Press to set the Scan mode on/off in GMRS mode. Press to change the Minute setting in Clock mode.

22. LOCK/CALL / HOUR Button – Press and hold to set the key pad lock on/off in GMRS mode. Press to send a CALL Alert signal in GMRS mode. Press to change the Hour setting in Clock mode.

23. FLASHLIGHT – Built-in flashlight.

24. USB JACK – used for charging mobile phone thru the Dynamo Crank.

25. EXTERNAL SPEAKER/MIC JACK

26. EXTERNAL CHARGER JACK – When using the AC or DC Adapter the rechargeable battery pack MUST be installed.

27. SPEAKER – Built-in speaker.

28. MENU Button – Press to access Menu mode in GMRS/FRS and WX mode.

29. PTT/SELECT/SNOOZE Button – Press and hold to transmit voice communication in GMRS mode. Press to confirm the selection in MENU and Clock mode. Press to activate SNOOZE function in Clock mode.

30. DYNAMO CRANK HANDLE – Rotate clockwise or counter-clockwise to charge the NiMH battery pack.

31. BAND SWITCH – used to switch between AM/FM/WX/GMRS mode.

32. TUNING KNOB – Rotate clockwise/counter-clockwise to make adjustment in the MENU mode. It can also make adjusment in the Clock and AM/FM receiver mode.

33. BATTERY SOURCE SWITCH – used to switch between Alkaline and Rechargeable NiMH batteries.

34. LIGHT ON/OFF SWITCH – used to turn the FLASHLIGHT on/off.

35. TONE CONTROL KNOB – Turn clockwise / counter-clockwise to increase/decrease the tone.

36. POWER/VOLUME KNOB – Turn clockwise to turn the power on and increase the volume level. Turn counter-clockwise to decrease the volume level and turn the power off.

37. MIC – Built-in microphone.

BATTERY INSTALLATION

Your XT511 Series radio operates with either 4 AA alkaline batteries or a NiMH battery pack. Pls. ensure the rechargeable NiMH battery pack is installed in the radio before using the AC or DC adapters.

To install the batteries:

1. With the back of the radio facing you, remove the Battery Cover by pressing down the Battery Cover Lock Tab until it unlocks and lifting it out from the radio.
2. Insert 4 AA batteries observing the polarity as shown. Installing the batteries incorrectly will prevent the unit from operating or may damage the unit. Also install the NiMH battery pack as shown below.
3. Return the Battery Cover by pushing it down into the back of the radio until the Battery Cover Lock Tab locks into place.

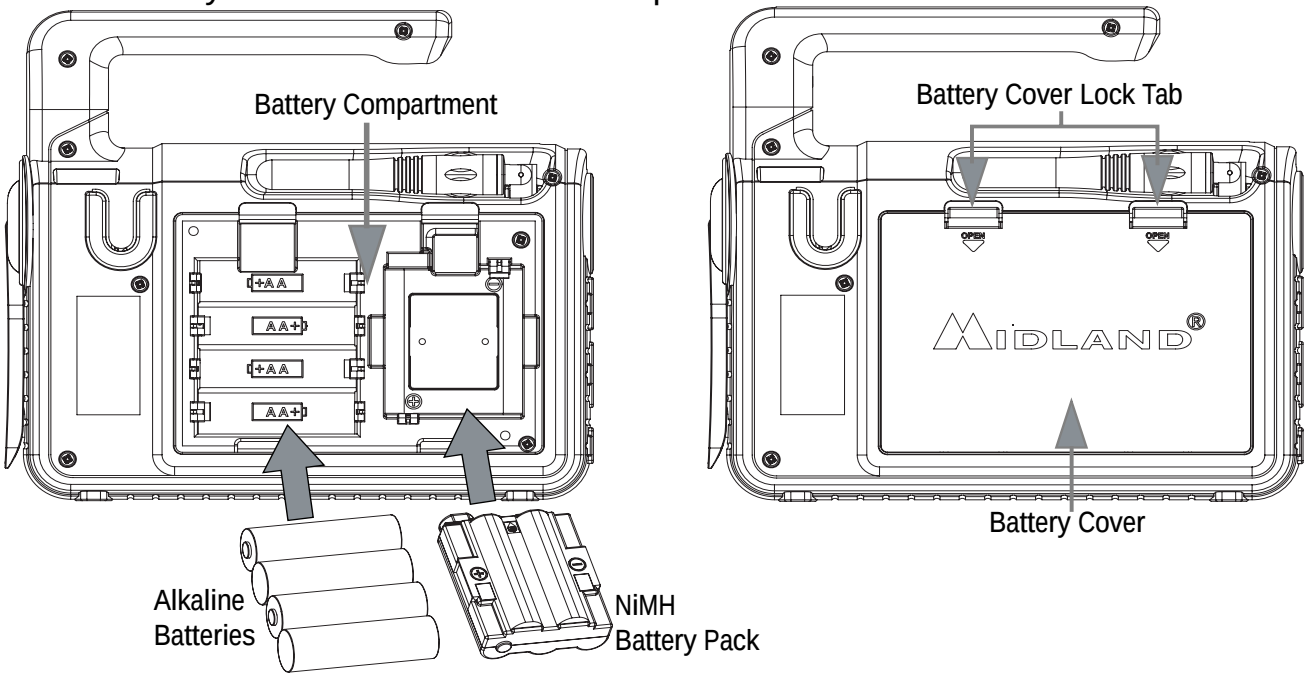

INSTALLING THE SHOULDER STRAP

To install the **SHOULDER STRAP**, slide the SHOULDER STRAP CLIP down into the metal pins on the top of the radio until it locks into place. To remove the **SHOULDER STRAP**, press the **SHOULDER STRAP CLIP** tab down, then remove it from the radio.

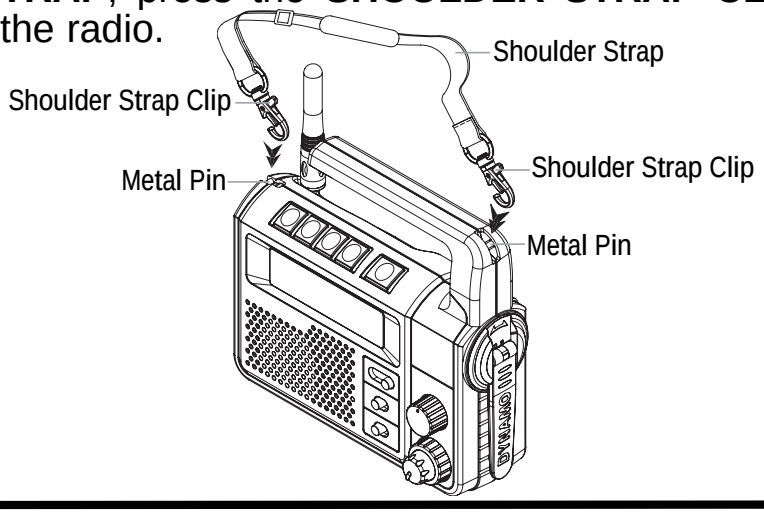

CHARGING THE BATTERY PACK

Your XT511 Series is equipped for using an rechargeable NiMH battery pack which can be recharged using an AC wall adapter (included) or a DC adapter (included). Initial charge time is 24 hours with a charge time of 12 hours thereafter. For maximum battery life, we recommend charging the battery pack when the low battery icon comes on. Remove the radio from the charger when the charge time expires. For the location of the **CHARGING JACK** see page 17.

In order to ensure that the battery pack is fully charged, it is recommended that the battery pack be charged for at least 12 hours with the radio turned OFF.

You can also charge the rechargeable NiMH battery pack using the Dynamo Crank.

To charge using the Dynamo Crank rotate rapidly the Dynamo Crank handle clockwise or counter-clockwise.

To get the best charging condition, it is recommended to charge the battery pack thru the Dynamo Crank with the radio turned OFF.

!

1. Only use our NiMH battery pack.
2. Do not attempt to charge alkaline batteries or any batteries or battery packs other than the one indicated in the manual. This may cause leakage and damage to the radio.
3. For long term storage of the radio, turn the radio OFF and remove the batteries from the radio.

BATTERY LEVEL INDICATOR

Your XT511 Series has a **BATTERY LEVEL METER** that shows the battery power level. The greater the number of bars visible, the stronger the battery level. When the battery level is low, the ***Battery Shell*** icon will flash in the display indicating your batteries should be replaced or recharged if using a rechargeable battery pack.

SELECTING THE POWER SOURCE

Your XT511 Series can use either an Alkaline battery or the rechargeable NiMH battery pack. Just set the **BATTERY SOURCE** switch to either ***"Alkaline"*** or ***"Rechargeable"*** (for NiMH battery pack) mode.

OPERATING YOUR RADIO

SETTING THE RADIO TO GMRS/FRS MODE

To set the XT511 to GMRS/FRS mode, move the **BAND** switch in **GMRS/FRS** position. The LCD will show the current **GMRS/FRS** channel setting.

POWER ON/OFF AND VOLUME

Rotate the **POWER/VOLUME** knob clockwise to turn the radio on and increase the volume level. Rotate the control counter-clockwise to reduce the volume level and to turn the radio off. During Power On, the LCD will display all icons for 1 second and the LCD display will indicate the last channel/frequency selected.

TRANSMITTING AND RECEIVING A CALL

To communicate, all radios in your group must be set to the same channel and Privacy Code.

1. Press and hold the **PTT** button and speak in a normal voice into the **microphone**. The **TX** icon will appear continuously on the LCD Display while transmitting.

   When using a **HAND MIC**, press and hold the **PTT** button on the side of the **HAND MIC** and speak in a normal voice.

   For maximum clarity, hold the **HAND MIC** 2 to 3 inches from your mouth.
2. To receive a call, release the **PTT** button. The **RX** icon will appear on the display when your radio is receiving a transmission.

ABOUT RANGE

Your XT511 Series radios are designed to give you maximum range under optimum conditions.

Optimum Conditions are:

- Over water
- Open rural areas without obstructions
- Flat areas where you can see the other person

To ensure you get maximum range:

- Be sure to use fresh or fully charged batteries - low batteries will cause low power conditions
- Be sure you are on a GMRS channel - FRS channels are restricted by the FCC to low power
- Be sure to set your radio to use Hi power.
- Be sure to point the **ANTENNA** upward.

XT511 QUICK REFERENCE CHART

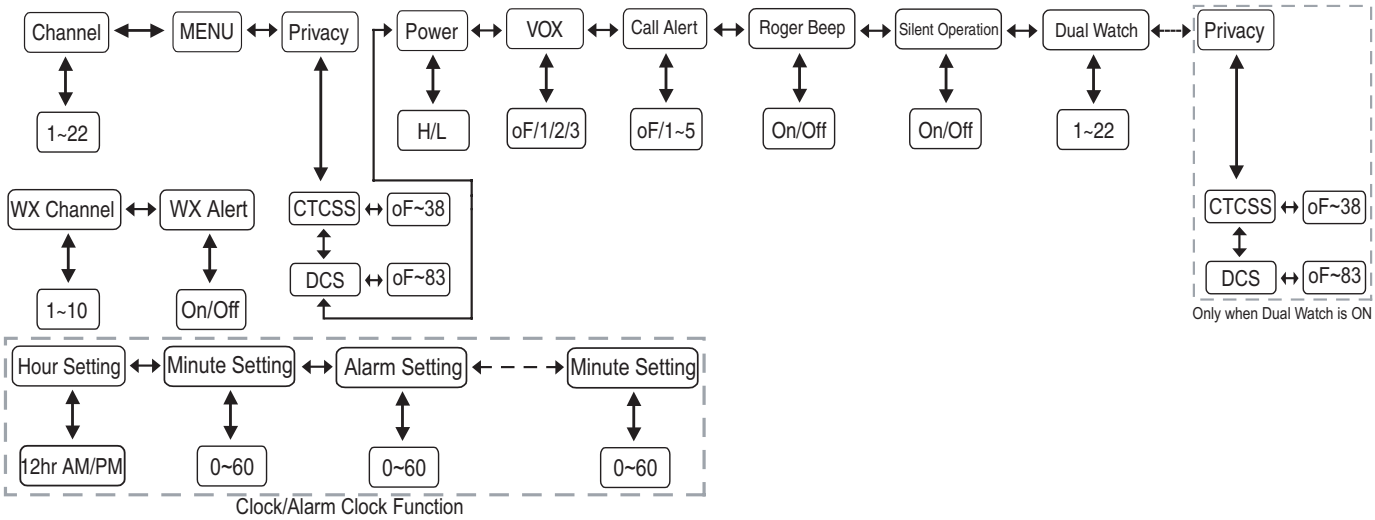

CHANNEL SELECTION (GMRS/FRS BAND)

Turn the **TUNING** knob clockwise or counter-clockwise to select one of the 22 GMRS/FRS channels.

MONITOR

Pressing the **MONITOR** button will let you check activity on your current channel before transmitting. This could also be used to adjust the volume level of the radio when it is not receiving a signal.

Press the **MONITOR** button again to get out of **MONITOR** mode.

SCAN

Your XT511 Series can scan all 22 channels for any activity. To enter, quickly press the **SCAN** button. Repeat the same procedure to exit. Your radio will rapidly scan each of the 22 channels and stop on any active channel. Your radio will stay on the active channel as long as the signal is present and will resume scanning 5 seconds after the signal is no longer present.

When you press the **PTT** button to transmit on an active channel, the scanning function will stop and remain on the active channel.

To resume scanning, quickly press the button.

CALL ALERT

Your XT511 Series can transmit a call alert for a fixed length of time. To send a call alert, press the **CALL/LOCK** button. The **TX** icon will appear while transmitting a call alert and a tone can be heard on the speaker for confirmation.

The XT511 has 5 call alert selections.

KEYPAD LOCK

To avoid accidentally changing the radio setting, press and hold the **CALL/LOCK** button for about 4 seconds. The **KEY LOCK** icon will appear on the display. The **PTT**, **CALL**, and **MONITOR** function will still be active. Repeat the same procedure to unlock the keypad.

DISPLAY ILLUMINATION

During Power on, the display illumination will activate for approx. 5 seconds. The display illumination can also be activated when the **MENU**, **SCAN** button is pressed. It can also be activated if the **TUNING** knob is turned.

Note: In Clock Mode (Power Off) the display illumination can be activated by pressing any button, or when the TUNING knob is turned.

SETTING PRIVACY CODES

Your XT511 Series has 121 **Privacy Codes** available. The selected **Privacy Code** may be different for each channel. To select a **Privacy Code** for the current channel press the **MENU** button once, and then turn the **TUNING** knob to select one of the 38 ***CTCSS*** Privacy Code. Press again the **MENU** button and turn the **TUNING** knob to select one of the 83 ***DCS*** Privacy Code. The **Privacy Code** icon on the display will indicate whether you set your Privacy Code in ***CTCSS*** or ***DCS*** mode. To confirm the selection, press the **PTT** button or press **MENU** button again to move to the next feature setting.

Note : If you select any ***CTCSS*** Privacy Code, any pre-selected ***DCS*** Privacy Code will be cancelled and vice-versa. Selecting a Privacy Code of "**oF**" will disable the Privacy feature. To communicate between two XT511 Series radios, all radios in your group must be set to the same channel and Privacy Code selections.

TRANSMIT (TX) POWER LEVEL SELECTION

Your XT511 Series has 2 power level settings. To select the power level on channels 1~7 and 15~22, press the **MENU** button until a "***Pr***" icon will appear on the display. Then turn the **TUNING** knob to select **TRANSMIT POWER LEVEL** icon **(H:** Hi**/L:** Lo**)**. To confirm, press the **PTT** button or press **MENU** button again to move to the next feature setting.

When the Battery Meter drops to 1 bar , the TX Power will automatically switch from Hi(H) to Lo(L) level.

Note : You cannot adjust the power setting on the FRS channels (8~14). They are set to Low power per FCC regulations.

VOX (Hands-free Transmission)

Your radio has 3 VOX level settings: ***(oF/1/2/3)***.

*To set **VOX***, press the **MENU** button until the display shows "**Vo**" while on the right, an "***oF***" icon appears. Select "***1***", "***2***", or "***3***" by turning the **TUNING** knob and push the **PTT** key, or press **MENU** button again to move to the next feature setting.

VOX will be more sensitive on the ***"1"*** setting than on the ***"3"*** setting.

*To turn **VOX** off*, press the **MENU** button until the display shows "**Vo**" while on the right, a "***1***", "***2***" or "***3***" icon appears. Select "***oF***" by turning the **TUNING** knob and push the **PTT** key, or press **MENU** button again to move to the next feature setting.

Note: For VOX Hands-free operation use Midland headset accessories or built-in internal microphone. The accessory hand mic is also intended for VOX mode use.

CALL ALERT SELECTION

Your XT511 Series has 5 selectable **CALL ALERTS *(oF/1~5)*.**

To select, press the **MENU** button until a "***CA***" icon appears and to the right of the "***CA***" icon the current **CALL ALERT** setting is displayed. Then turn the **TUNING** knob to make the **CALL ALERT** selections - the radio will emit a corresponding tone for each selection. To confirm, press the **PTT** button or press **MENU** button to move to the next feature setting.

Note: Setting the CALL Alert to "oF" will disable the CALL Alert function.

ROGER BEEP (end of transmission) TONE

When the **PTT** button is released, the radio will beep to confirm to other users that your transmission has finished.

To turn the **ROGER BEEP** tone on, press the **MENU** button until the display shows an "***rb***" icon while on the right of the "***rb***" display, an "***oF***" icon appears. Select "***on***" by turning the **TUNING** knob and push the **PTT** key, or press **MENU** button to move to the next feature setting. The **ROGER BEEP** icon will appear on the display.

To turn the **ROGER BEEP** tone off, press the **MENU** button until the display shows an "***rb***" icon while on the right of the "***rb***" display, an "***on***" icon appears. Select "***oF***" by turning the **TUNING** knob and push the **PTT** key, or press **MENU** button to move to the next feature setting. The **ROGER BEEP** icon will disappear on the display.

SILENT OPERATION

Your XT511 Series has a **SILENT OPERATION** mode. In this mode, all “beeps” and “tones” are disabled.

*To turn the **SILENT OPERATION** mode on*, press the **MENU** button until the display shows an “***bP***” icon while on the right of the “***bP***” display, an “***on***” icon appears. Select “***oF***” by turning the **TUNING** knob and push the **PTT** key to confirm or press the **MENU** button to move to the next feature setting. The **KEY TONE** icon will appear on the display.

*To turn the **SILENT OPERATION** mode off*, press the **MENU** button until the display shows an “***bP***” icon while on the right of the “***bP***” display, an “***oF***” icon appears. Select “***on***” by turning the **TUNING** knob and push the **PTT** key or **MENU** button. The **KEY TONE** icon will disappear on the display.

DUAL WATCH

Your XT511 Series has a **DUAL WATCH** function, to enable user to monitor 2 selected channel/privacy code for any activity. It is similar with the **SCAN** function but will only monitor 2 channels instead of the whole 22 channels. The first channel/privacy code is the current setting, the second channel/privacy code is the one you will set on the **MENU**.

To turn on the **DUAL WATCH** function, press the **MENU** button until the **DUAL WATCH** icon appear while in the right an ***“oF”*** icon appears. Select the second channel by turning the **TUNING** knob.To select a **Privacy Code** for the second channel press the **MENU** button once, and then turn the **TUNING** knob to select one of the 38 ***CTCSS*** Privacy Code or press again the **MENU** button and turn the **TUNING** knob to select one of the 83 ***DCS*** Privacy Code. Press the **MENU** or **PTT** button to confirm. The **DUAL WATCH** icon will remain on the display.

The radio will rapidly scan the two channels selected and stop on any active channel. Your radio will stay on the active channel as long as the signal is present and will resume scanning 5 seconds after the signal is no longer present.

To turn off the **DUAL WATCH** function, press the **SCAN** button. The current **GMRS/FRS** radio setting will be displayed and the **DUAL WATCH** icon will disappear on the display.

Note: *When the radio is in Dual Watch or Scan mode for GMRS, it will be overridden with a weather alert.*

SETTING THE RADIO TO NOAA WEATHER RADIO MODE

To set the XT511 to **NOAA WEATHER RADIO** mode, move the **BAND** switch in **WX** position. The LCD will show the current **WX** channel setting, and the **NOAA WEATHER (WX) BAND** icon will appear on the display. Turn the **TUNING** knob to select one of the 7 **NOAA WEATHER (WX) BAND** channels.

NOAA WEATHER ALERT

Your XT511 has a **NOAA WEATHER ALERT** function, to enable you to automatically receive weather alert from designated **NOAA** stations.

To turn the **NOAA WEATHER (WX) ALERT** on, press the **MENU** button once while in **WX Band**. The **NOAA WEATHER (WX) ALERT** icon will appear on the display while on the right an ***"oF"*** icon appears. Select ***"on"*** by turning the **TUNING** knob. To confirm, press the **PTT** or the **MENU** button. The radio will return to **WX BAND** and the **NOAA WEATHER (WX) ALERT** icon will remain on the display. If the radio receives a **WX ALERT** signal from a designated **NOAA** station while on **WX** mode, the radio will beep for 20 seconds while an ***"AL"*** and ***"In"*** icon appear on the display while the **FLASHLIGHT** and the display illumination will blink altogether. Afterwhich the radio will automatically go to **NOAA WEATHER RADIO** mode.

If the radio receives a **WX ALERT** signal from a designated **NOAA** station while on **AM/FM** or **GMRS/FRS** mode, the radio will beep for 20 seconds while the **NOAA WEATHER (WX) ALERT** icon will appear blinking on the display while the **FLASHLIGHT** and the display illumination will blink altogether. In this case, the user should set the **BAND** switch to **WX** position to listen for any weather alert broadcast.

The NOAA WEATHER (WX) ALERT icon will remain blinking on the display when it receives a WX ALERT signal unless the BAND switch is set to WX mode or any button is pressed. This is to remind the user that a WX Alert signal have been received in case they missed it.

To turn the **NOAA WEATHER (WX) ALERT** off, press the **MENU** button once while in **WX Band**. The **NOAA WEATHER (WX) ALERT** icon will appear on the display while on the right an ***"oF"*** icon appears. Select ***"oF"*** by turning the **TUNING** knob. To confirm, press the **PTT** or **MENU** button.

SETTING THE RADIO TO AM/FM RECEIVER MODE

To set the XT511 to **AM/FM RECEIVER** mode, move the **BAND** switch in **AM** or **FM** position. The LCD will show the current **AM** or **FM** channel setting.

Note: *When switching from Weather or GMRS modes to AM or FM radio, you may notice a delay before the radio tunes into a station. This is normal operation and is not an indication the radio is not working. You may also notice this delay when Powering the Radio ON in AM or FM modes.*

CHANNEL SELECTION (AM/FM BAND)

Turn the **TUNING** knob clockwise or counter-clockwise to select the AM or FM frequency. Turning and holding the **TUNING** knob will make the radio scan for the frequency continuously until it receives a strong signal.

SETTING THE RADIO TO CLOCK MODE

To set the XT511 to **CLOCK** mode, just turn the **POWER/VOLUME** switch to **OFF**. The display will show the current time setting.

CHANGING THE HOUR SETTING

To change the hour setting of the clock, press the **LOCK/ CALL/ HOUR** button while in **CLOCK** mode, and the hour digit of the clock will blink. Turn the **TUNING** knob to change the hour setting. Press the **PTT/SELECT** button to confirm.

CHANGING THE MINUTE SETTING

To change the minute setting of the clock, press the **SCAN/MINUTE** button while in **CLOCK** mode, and the minute digit of the clock will blink. Turn the **TUNING** knob to change the hour setting. Press the **PTT/SELECT** button to confirm.

SETTING THE ALARM CLOCK

The XT511 can also function as an **ALARM CLOCK**. To turn the **ALARM CLOCK** on, press the **ALARM ON/OFF** button while in **CLOCK** mode. The **ALARM CLOCK** icon will appear.

To set the hour setting of the **ALARM**, press the **LOCK/CALL/HOUR** button while in **CLOCK** mode, and the hour digit of the clock will blink. Turn the **TUNING** knob to change the hour setting. Press the **PTT/SELECT** button to confirm.

To set the minute setting of the **ALARM**, press the **SCAN/MINUTE** button while in **CLOCK** mode, and the minute digit of the clock will blink. Turn the **TUNING** knob to change the minute setting. Press the **PTT/SELECT** button to confirm.

To turn the **ALARM CLOCK** off, press the **ALARM ON/OFF** button while in **CLOCK** mode. The **ALARM CLOCK** icon will disappear.

ALARM CLOCK SNOOZE

When the **ALARM CLOCK** goes off, you can activate the **SNOOZE** function by pressing the **SNOOZE** button. Everytime the **SNOOZE** button is pressed the **ALARM CLOCK** will go off again after 8 minutes.

USING THE FLASHLIGHT

Your XT511 Series has a built-in **FLASHLIGHT**.

To turn the **FLASHLIGHT** on, set the **LIGHT** switch to ON.

To turn the **FLASHLIGHT** off, set the **LIGHT** switch to OFF.

EXTERNAL SPEAKER/MICROPHONE JACK

Your XT511 Series can be used with an optional external speaker/microphone or headset, freeing your hands for other tasks. You can also use the **HAND MIC** thru the **SPEAKER/MICROPHONE JACK**.

To use an optional speaker/microphone or headset:

- Open the **SPEAKER/MIC** Jack Rubber Cap on the side radio.
- Insert the plug(s) into the **SPK/MIC** jacks.
- Place the earbud into your ear, and adjust the mic into your desired position.

Note: *When the **HAND MIC** is connected, all audio will play through the **HAND MIC** because it is a speaker mic. This is normal operation.*

USB JACK

Your XT511 Series can be used to charge a mobile phone by the **DYNAMO CRANK, AC, or DC Adapter** thru the USB Jack.

- Open the **USB** Jack Rubber Cap on the side radio.
- Attach a **USB Charging Cable** (not included) to the mobile phone.
- Connect the other end of the **USB Charging Cable** to the **USB** Jack of the XT511.
- Recharge the mobile phone battery by turning rapidly the **DYNAMO CRANK,** or by attaching the **AC** or **DC Adapter** in the **Charging Jack**.

Note: Charging a mobile phone thru the USB Jack is intended for emergency purpose only. It is not intended for recharging fully a discharged battery.

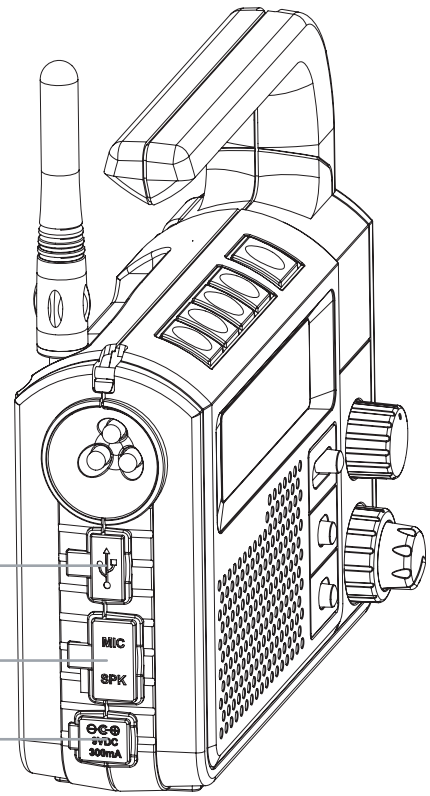

TROUBLESHOOTING GUIDE

No Power	- Check battery installation and/or replace batteries
Cannot Receive Messages	- Confirm the radios have the same channel and Privacy Code settings. - Make sure that you are within range of the other transceivers. - Buildings and other structures may interfere with your communication. ***(See ABOUT RANGE on Page 10)***
Radio is not responding to button presses	- Make sure key lock is not on. See "Keypad Lock" (Page 12). - Radio might need to be reset. Turn radio off then on. - Ensure accessory microphone is set properly
Display is dim	- Recharge or replace batteries.
Charger not functioning	- Ensure that the Charger Plug is installed in the radio properly. - Ensure the outlet where the charger is plugged into is functioning properly. - Check that the battery pack is installed in the radio properly.

USE AND CARE

1. Use a soft damp cloth to clean the radio
2. **Do not** use alcohol or cleaning solutions to clean the radio.
3. **Do not** immerse the radio in water.
4. Dry the radio with dry lint-free cloth should it get wet.
5. Turn off the radio and remove the batteries during long-term storage.

If you have a problem which you believe requires service, please call first and speak with a service technician. Many problems can be remedied over the phone without returning the unit for service.

SPECIFICATIONS

Channels 22 GMRS/FRS Channels +121 Privacy Codes
7 NOAA Weather (WX) Band Channels

Operating Frequency UHF 462.5500 ~ 467.7125 MHz
AM : 520kHz ~ 1710kHz -10kHz steps
FM : 87.5MHz ~ 108.0MHz - 100kHz steps

Power Source 4 AA Alkaline or 6.0V Rechargeable Ni-MH battery pack

GMRS/FRS FREQUENCY CHART (MHz)

CH. No	CH. Freq.	CH. No	CH. Freq.	CH. No	CH. Freq.
1	462.5625	**9**	467.5875	**17**	462.6000
2	462.5875	**10**	467.6125	**18**	462.6250
3	462.6125	**11**	467.6375	**19**	462.6500
4	462.6375	**12**	467.6625	**20**	462.6750
5	462.6625	**13**	467.6875	**21**	462.7000
6	462.6875	**14**	467.7125	**22**	462.7250
7	462.7125	**15**	462.5500		
8	467.5625	**16**	462.5750		

* Channels 8~14 are low-power FRS license free channels

NOAA WEATHER (WX) RADIO FREQUENCY CHART (MHz)

CH. No	CH. Freq.	CH. No	CH. Freq.
1	162.400	**6**	162.525
2	162.425	**7**	162.550
3	162.450		
4	162.475		
5	162.500		

PRIVACY CODES FREQUENCY CHART (Hz)

Code	Freq.	Code	Freq.	Code	Freq.	Code	Freq.	Code	Freq.
1	67.0	9	91.5	17	118.8	25	156.7	33	210.7
2	71.9	10	94.8	18	123.0	26	162.2	34	218.1
3	74.4	11	97.4	19	127.3	27	167.9	35	225.7
4	77.0	12	100.0	20	131.8	28	173.8	36	233.6
5	79.7	13	103.5	21	136.5	29	179.9	37	241.8
6	82.5	14	107.2	22	141.3	30	186.2	38	250.3
7	85.4	15	110.9	23	146.2	31	192.8		
8	88.5	16	114.8	24	151.4	32	203.5		

Note: Privacy codes can be programmed for use on any channel

DCS PRIVACY CODE CHART

No.	CODE	No.	CODE	No.	CODE
1	023	29	174	57	445
2	025	30	205	58	464
3	026	31	223	59	465
4	031	32	226	60	466
5	032	33	243	61	503
6	043	34	244	62	506
7	047	35	245	63	516
8	051	36	251	64	532
9	054	37	261	65	546
10	065	38	263	66	565
11	071	39	265	67	606
12	072	40	271	68	612
13	073	41	306	69	624
14	074	42	311	70	627
15	114	43	315	71	631
16	115	44	331	72	632
17	116	45	343	73	654
18	125	46	346	74	662
19	131	47	351	75	664
20	132	48	364	76	703
21	134	49	365	77	712
22	143	50	371	78	723
23	152	51	411	79	731
24	155	52	412	80	732
25	156	53	413	81	734
26	162	54	423	82	743
27	165	55	431	83	754
28	172	56	432	-	-

Note: Privacy codes can be programmed for use on any channel

LIMITED WARRANTY

Midland Radio Corporation will repair or replace, at its option without charge, any Midland FRS/GMRS transceiver which fails due to a defect in material or workmanship within Three Years following the initial consumer purchase. This warranty does not apply to water damage, battery leak or abuse.

Accessories have a 90 day warranty from date of purchase, including any antennas, chargers, or earphones. This warranty does not include the cost of labor for removal or re-installation of the product in a vehicle or other mounting. Performance of any obligation under this warranty may be obtained by returning the warranted product, prepaid freight, along with proof of purchase to:

Midland Radio Corporation
Warranty Service Department
5900 Parretta Drive
Kansas City, MO 64120

This warranty gives you specific legal rights, and you may also have other rights, which vary from state to state.
Note : The above warranty applies only to merchandise purchased in the United States of America or any of the territories or possessions thereof, or from a U.S. Military exchange.

Midland Radio Corporation
5900 Parretta Drive
Kansas City, MO 64120
Tel: (816) 241-8500
E-mail: mail@midlandradio.com
URL: www.midlandradio.com

ACCESSORIES

Accessories can be purchased at **www.midlandradio.com** or fill in the form on the following page and mail it to our address.

AVP-7

- 2 Rechargeable battery packs
- **$19.99**

AVP-1

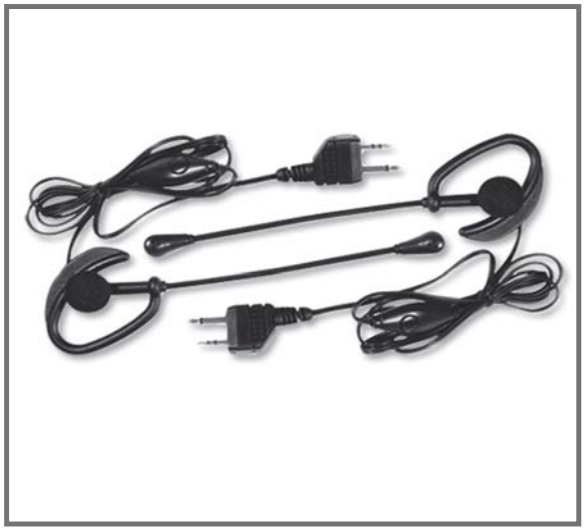

- 2 Over the Ear Mic. Headsets w/ PTT

- **$19.99**

AVP-H1

- 1 Open Face Helmet Microphone Kit

- **$49.99**

AVP-H2

- 1 Closed Face Helmet Microphone Kit

- **$49.99**

AVP-H3

- 2 Surveillance Headset
- **$39.99**

AVP-H4

- 2 Ear Wrap Headset
- **$39.99**

AVP-H5

- 2 Behind the Head Headset
- **$39.99**

ACCESSORIES ORDER FORM

Please send Money Order or fill in Visa/MasterCard information and mail to the address below. Please **DO NOT** send cash or checks. Make Money Order to Midland Radio Corporation.

Name: _____

Address: _____

City: _____ **State** _____**Zip Code** _____
Tel: _____ **email:** _____

CC# _____ **Type:** _____ **Exp.** _____

Qty	Item	Price	Total
	AVP-7	$19.99	
	AVP-1	$19.99	
	AVP-H1	$49.99	
	AVP-H2	$49.99	
	AVP-H3	$39.99	
	AVP-H4	$39.99	
	AVP-H5	$39.99	

Mail To:
Midland Radio Corporation
Consumer Dept.
5900 Parretta Drive
Kansas City, MO 64120

Or Call 816.241.8500.

To order online go to
www.midlandradio.com

Sub-Total _____
Tax (MO, CO, IL, FL only) _____
S & H _____ $14.95
(Applies to Domestic U.S. only. For Hawaii, Alaska, and Puerto Rico S&H will be $36.25 for 1lb and $64.25 for 2lbs or more).

Total $_____

MIDLAND RADIO CORPORATION
5900 Parretta Drive
Kansas City, MO 64120
Call 816.241.8500

visit us at http://www.midlandradio.com

Note: Features & Specifications are subject to change without notice. MIDLAND is not responsible for unintentional errors or omissions on its packaging.