Docket Number: #20/9186

Applicants: Woodland Hills Church of Christ
3040 SE 72nd Street, Runnells, IA (Titleholder)
AT&T Mobility(Applicant/Lessee) represented by Curt Walter of Powder River Development Services, LLC., 2897 Lake Vista Drive NW, Rochester, MN

Request: The Applicants are requesting a Conditional Use Permit to construct a 180-foot tall monopole communication tower with an AT&T equipment cabinet and generator to be located within a proposed 100' x 100' fenced lease area on the subject property at 2484 SE 68th Street within Fourmile Township.

Background:

AT&T Mobility is requesting a Conditional Use Permit to allow the construction of a monopole communication tower on the subject property located at 2484 SE 68th Street. The tower will provide continuous coverage for first responders as part of the national FirstNet network as well as provide service to address the coverage gap for customers within the Pleasant Hill area and the surrounding residential and commercial areas near the Woodland Community Church. The proposed communication tower will provide sufficient cellular coverage and faster wireless data rates in the surrounding area. The tower is proposed to be a 180-foot monopole, with a 12-foot lightening rod and approximately eight (8) foot long AT&T antennas mounted within the RAD Center at an approximate 176-foot height on the pole. The proposed communication tower is planned to be installed within a 100' x 100' lease area in the southwest portion of the property with the tower meeting a 55-foot setback from the western property line. A proposed 6' x 6' walk in cabinet and 20KW Generac generator is located to the northeast of the communication tower. An 11-foot ice bridge will be constructed to connect the equipment cabinet to the tower. No lighting is proposed for the communication tower.

The subject property is an irregular shaped parcel with approximately 351 feet of frontage along SE 68th Street and a depth of 1,009-feet, containing approximately 10-acres. See *Attachment 'A'* for an aerial vicinity map of the subject property and surrounding neighborhood. An existing church, Woodland Hills Church of Christ, is located on the property along with an existing paved and curbed parking lot and two existing access driveways onto SE 68th Street. The church is located on the eastern approximately 1/3 of the property and the remainder of the property is existing open space and mature woodlands. An existing single-family residence is located on the parcel adjacent to the south and there are three existing single-family residences across SE 68th Street to the east of the subject property. The subject property is zoned "RR" Rural Residential District and is located in Fourmile Township. The Polk County Zoning Ordinance permits communication towers to be located within the "RR" District upon the granting of a Conditional Use Permit by the Polk County Board of Adjustment. A Variance has also been requested for the paving and curbing requirements for non-residential uses within the "RR" Rural Residential district.

Application Details/Discussion:

As stated above, the applicant is requesting permission to construct a 180-foot monopole communication tower on the subject property located at 2484 SE 68th Street. The communication tower is permitted within the "RR" Rural Residential District upon approval of a Conditional Use Permit by the Polk County Board of Adjustment.

A site layout of the property was submitted with the application and is included following this report, entitled *Attachment 'B'*. The tower site is zoned "RR" District, which allows communication towers with a maximum height of 180 feet as a conditional use. The proposed tower base would meet a Maximum Fall Zone radius equal to or less than 55-feet as certified by the Senior Design Engineer with Sabre Industries, Inc. According to the site layout, the applicants propose to use the existing access located at the northeast corner of the property as utilized for the existing church parking lot. The proposed driveway extension will be constructed from the northwest corner of the existing paved church parking lot. The driveway extension is A 12-foot wide crushed gravel access drive is shown extending from the paved parking lot connecting this access point to the southwest portion of the parcel where a 100' x 100' lease area is identified. The proposed tower base is shown centrally within the 100' x 100' lease area that is located over 900-feet from the front property line. The 6' x 6' walk in cabinet is shown adjacent to the northeast of the tower base and the generator directly north of the cabinet. A six (6) foot chain link fence enclosure with a one (1) foot extension of barbed wire at the top is proposed surrounding the lease area measuring approximately 75 feet wide by 75 feet long. The lease area is located over 900-feet from the public right-of-way and is surrounded by existing mature woodlands. The landscaping screening will be met by the existing vegetation that should sufficiently screen the surrounding properties from tower location.

The signal propagation maps that were provided by the applicant indicate that the proposed tower would provide coverage to an area with poor indoor and outdoor coverage. This area is generally described as being north of SE Vandalia Drive and to the east of US Highway 65. The new tower would provide this area with improved capacity and signal strength to provide high data speeds for both indoor and outdoor coverage. A letter from the Radio Frequency Design Engineer with AT&T Mobility Division has been submitted along with the signal propagation maps. (See *Attachment 'C'*) This letter indicates that, "the existing Verizon Wireless tower, located at 1100 SE 68th Street, is approximately 1 mile north of the proposed AT&T installation and is the only existing tower structure, not owned by AT&T within 2 ¼ miles. The Verizon Wireless tower will not meet AT&T's coverage objective through collocation as it is outside of the coverage gap that is proposed to be bridged." The engineer indicates that the new wireless communication facility is needed in this area and was chosen due to coverage capabilities. The intent is to provide continuous coverage for first responders as part of the national FNET network and to broadcast technology, enabling faster wireless data rates, as well as provide connectivity coverage for surrounding properties and for commuters. The letter also states, "customers in the immediate area are experiencing a coverage gap during our systems busiest times. Connectivity is always essential to our customers – doctors and nurses, first responders, governments, banks, grocery stores, pharmacies and others delivering vital services…The FirstNet build is being carried out with direct feedback from state and public safety officials to ensure network coverage for first responder."

The following represents some of the other cellular carriers located on nearby communication towers near the proposed communication tower site. This information is based on the site map of existing towers submitted by the applicant and Polk County records.

Tower Location:	Cellular Carrier:	Height:	Location:
6800 SE 45th Street	US Cellular	165'	City of Des Moines
6645 SE 120th Street	US Cellular	225'	Camp Township
7261 SE 45th Street	AT&T	141'	City of Des Moines
4095 SE 45th Street	AT&T	192'	City of Des Moines
Sunrise Park Antennas On Water Tower	AT&T		City of Pleasant Hill
3801 Dean Avenue	US Cellular	180'	City of Des Moines

History and Surrounding Area:

The existing property is identified as Parcel O as created by a recorded Plat of Survey within Book 9130, Page 577 and recorded on September 13, 2001. A Conditional Use Permit was approved by the Board of Adjustment in 2008 to allow an Indoor Institutional Use to be located on the property, specifically a church. According to the Polk County Assessor records, the subject property was recorded into the applicant's name on December 6, 2001. A site plan was submitted for the church building and approved on November 18, 2008. The building was constructed in 2009. Three existing accessory buildings are located along the western side of the church building. No permits are on file for these structures and they are not shown on the approved site plan. Two of the structures appear on aerial imagery between 2011-2013, a third structure between 2015-2017. A sketch site plan will be required for the accessory buildings with appropriate permits pulled. The structures will also be required to meet the 30-foot separation requirement and will need to be relocated. All structures will also need to meet a minimum 10-foot separation from any part of the existing septic system. The subject property is utilized primarily for the Woodlands Church of Christ building and paved parking lot. Existing open space is covered in grassland and mature woodlands along the western two-thirds of the subject property.

The subject property is located in an established rural residential area of unincorporated Polk County. Residential properties are located adjacent to the north, east and south of the subject property and a church is located on the subject property. The following represents the land use and zoning of the adjacent parcels. The information is based on field review, aerial review and Polk County Assessor's records.

Direction	Use/Business	Zoning	Lot Size (acres)
North	Vacant Primarily Woodlands	LDR/RR	23.6
	Single-Family Residential 2420 SE 68th St (not adjacent)	RR	.92
East	Single Family Residential 2465 SE 68th Street	RR	2.15
	Single-Family Residential 2499 SE 68th Street	RR	2.15
	Single-Family Residential 2575 SE 68th Street	RR/AT	14.95
South	Single-Family Residential 2590 SE 68th Street	RR	2.14
	Single-Family Residential 2620 SE 68th Street	RR	5.11
West	Vacant Primarily Woodlands	LDR/RR	23.6

The closest residences to the proposed communication tower are located over 850-feet from the tower base. According to the Polk County Assessor's records, the residences were built in 1941 and 1946. There are 14 single family residences located on parcels within 500 feet of the subject property. Established neighborhood residences are located beginning approximately 850 feet to the northeast and southeast of the proposed communication tower.

The designation of the subject property and properties to the east and south in the 2030 Polk County Comprehensive Plan is Rural Residential Classification. The designation of the surrounding properties on the west and north is Low Density Residential Classification. The properties across SE Vandalia Drive to the southwest are designated as Rural Residential Classification. The utility goal of the Southeast Area Plan identified in the Polk County 2030 Comprehensive Plan is that Polk County will encourage extension of urban services including wastewater, water, fire protection, and telecommunications infrastructure in an efficient manner that serves urban and rural residences.

Natural Resources / Environmental

The property is not located within the 100 year floodplain. There is an existing drainageway in the southwest corner of the property that is surrounded by mature woodlands. The grade of the subject property generally slopes towards the southwest corner of the property. The lowest elevation is located along the drainageway in the southwest corner at an elevation of 800-feet. The high point is located is located along the eastern boundary of the property at an elevation of 912-feet. The proposed location of the tower is at an elevation of approximately 901-feet.

The existing church along with accessory buildings are located within the eastern approximately 1/3 of the subject property. The remainder of the property is open space and pasture land with a large amount of green space located on the west side of the existing buildings. The subject property has mature deciduous woodlands within the southwest portion of the site that will screen the lease site from adjacent properties. The property adjacent to the east has an existing

Polk County Conservation Pollinator Garden.

Roads/Utilities

The subject property currently utilizes an onsite wastewater treatment system. All buildings are required to meet a minimum 10-foot separation from any part of the onsite wastewater treatment system. Water service is provided by Des Moines Water Works. The communication tower will not affect utilities to the existing site nor will it need septic or water services. The subject property is bordered to the south by SE 68th Street. SE 68th Street is classified as a Minor Collector roadway maintained by Polk County.

Analysis

The Board of Adjustment in reviewing an application for a Conditional Use permit shall consider the proposal in terms of:

1. **Existing zoning and land use in the vicinity of the uses.**

   The subject property and surrounding area to the south and east are zoned "RR" Rural Residential District. The immediate surrounding area to the north and west of the subject property are zoned "LDR" Low Density Residential District. Surrounding properties are developed primarily with single-family dwellings. The subject property has an existing church and associated site improvements.

2. **Planned and proposed public and private development, which may be adversely affected by the proposed use.**

   There are no other known major public or private developments planned in the area of the subject property that would be affected by the proposed communication tower.

3. **Whether and to what extent the proposed use, at the particular location for which it is suggested, is necessary or desirable to provide a development which is in the interest of the public convenience or which will contribute to the general welfare of the area or Polk County.**

   The proposed location at the subject property meets the needs of AT&T and the tower is required to be designed to accommodate up to three total cellular antenna systems benefiting other cellular phone customers. Also, the existing coverage map of the subject property tower site and surrounding area from AT&T shows mostly poor indoor and outdoor coverage. The coverage map of the subject property and surrounding area with the proposed communication tower shows the area with good indoor and good outdoor coverage. The new tower would improve system accuracy for FirstNet technology.

4. **Whether and to what extent all steps possible have been taken by the developer to minimize any adverse effects of the proposed use on the immediate vicinity and on the**

public health, safety and welfare in general.

The applicants plan to use the existing drive access at the northeast corner of the subject property. The communication tower is planned to be constructed in the southwestern area of the subject property with the lease area to be setback over 900-feet from the right-of-way. Existing mature woodlands on the subject property will partially obstruct the view of the proposed tower. The height of the existing mature woodlands will provide a beneficial screen limiting the view of the structure and minimizing the visual impact in the surrounding neighborhood. A fence enclosure will surround the tower and associated equipment securing the project from unauthorized entry. The proposed communication tower has a collapse radius at the base of the tower that is certified by the engineer to ensure that the tower will collapse on the property if a storm event damages the tower. Potential adverse impacts may include an illumination light at the top of the tower if their analysis determines that they are within vicinity of an air space. This information was not conclusive and further analysis is being completed by the applicant. Staff's recommended conditions for approval help to mitigate potential impacts.

Findings

The application shall be denied if the Board of Adjustment finds any of the following:

a. The application and record fail to establish compliance with the standard made applicable to the proposed development by the provision of this Ordinance.

The application will be in compliance with the granting of the Conditional Use Permit by the Polk County Board of Adjustment and satisfactory compliance and/or completion of the conditions identified in this staff recommendation and as may be adopted by the Polk County Board of Adjustment.

b. The proposed use, developed in the proposed manner, and at the proposed location, would be inconsistent with the standards pursuant to the provisions of this Ordinance.

The proposed use will be located in the "RR" Rural Residential District which permits communication towers to be located on the subject property upon the granting of a Conditional Use Permit by the Polk County Board of Adjustment. Subject to staff's recommended conditions of approval, the use will be in compliance with the standards and provisions of the Ordinance.

c. The adverse impacts on the overall public health, safety and welfare are not balanced by the public or private benefits of the proposal. The Board of Adjustment shall include in this balance, any proposals of the applicant and any conditions that it might impose on the development, pursuant to the provisions of this Ordinance, to ameliorate problems associated with the development.

The applicants will be required to submit and obtain site plan approval from the County and meet the construction and operation permit requirements of the Polk County Air Quality

Division if a generator is added within the lease area. The closest residence is located over 850 feet from the proposed communication tower. The goal of constructing the communication tower is to improve cell phone coverage and service for AT&T customers. The proposed tower is required to accommodate three total antenna systems. Traffic to the tower site is anticipated to be minimal for service personnel doing routine maintenance on the tower and equipment. The Zoning Ordinance requires the communication tower to be removed from the subject property at the end of the lease term or when the tower is no longer needed. See staff's recommended conditions of approval. The level of impact upon the neighborhood is balanced by the benefits of the use, and mitigated by the requirements of the Ordinance and staff's recommended conditions of approval.

In addition, no application for a Conditional Use Permit shall be approved unless the Board of Adjustment specifically finds the proposed conditional use appropriate in the location for which it is proposed. This finding shall be based on the following criteria:

A. The proposed use is not in harmony with the general purpose, goals, objectives, and standards of the following:

1. **Polk County Comprehensive Plan:** The proposal is consistent with the goals and policies of the 2030 Polk County Comprehensive Plan.

2. **Polk County Zoning Ordinance:** The proposed communication tower is allowed upon approval of the Conditional Use Permit by the Polk County Board of Adjustment.

3. **Other plan, program, map, or ordinance adopted, or under consideration pursuant to official notice, by the County:** The applicant will be required to meet the construction and operation permit requirements of the Polk County Air Quality Division. A building permit will be required for the cabinet structure and will need to meet Building Code requirements.

B. The proposed location of the use is not consistent with policies or provisions of the following:

1. **Comprehensive Plan:** The proposed location for the communication tower is consistent with the goals identified in this staff report.

2. **Polk County Zoning Ordinance:** The proposed location for the use is allowed upon approval of the Conditional Use Permit by the Polk County Board of Adjustment, subject to meeting site plan and other permit requirements.

3. **Other plan, program, map, or ordinance adopted, or under consideration pursuant to official notice, by the County:** The applicant will be required to meet the Polk County Air Quality construction and operation permit requirements for the generator as well as a building permit for the cabinet structure.

C. The proposed use at the proposed location results in a substantial or undue adverse effect

on any of the following either as they now exist or as they may in the future be developed as a result of the implementation of provisions and policies of the Comprehensive Plan, this Ordinance, or any other plan, program, map, or ordinance adopted, or under consideration pursuant to official notice, by the County or other governmental agency having jurisdiction to guide growth and development:

1. **Adjacent property:** The proposed communication tower will likely be seen by the adjacent residences, however the large setback from the road and surrounding mature woodlands on the subject property will provide a significant screen for the communication tower. A detailed site plan is required to address all required standards of the Zoning Ordinance.

2. **Character of the neighborhood:** The primary use(s) of the property will continue be Indoor Institutional. The significant setback from the road and surrounding mature woodlands will limit the impact of the communication tower on the character of the neighborhood.

3. **Traffic conditions:** The subject property is adjacent to SE 68th Street, a paved Minor Collector road. SE 68th Street is also a through road that connects with SE Vandalia Drive to the south and SE 6th Avenue to the north.

4. **Parking:** A crushed gravel access drive is proposed and shown without parking spaces.

5. **Public improvements:** No impact upon future public improvements is anticipated.

6. **Public sites or rights-of-way:** During construction of the drive, lease area and communication tower, the applicant will also be required to keep any dirt, mud and debris from accumulating on adjacent roads. There should be no impact to public sites and rights-of-way.

7. **Other matters affecting the public health, safety, and general welfare:** The applicant will be required to submit a signed detailed site plan and certification by an Iowa licensed engineer for stormwater requirements, and that the communication tower will meet the minimum safety requirements of the zoning ordinance. The tower must also meet all applicable "FCC" Federal Communications Commission and "FAA" Federal Aviation Administration requirements.

D. The proposed use in the proposed area is not adequately served by or imposes an undue burden on any of the following.

1. **Public improvements:** Adequate for proposed use.

2. **Public facilities:** Adequate for proposed use.

3. **Public utilities:** Adequate for proposed use.

4. **Public services:** Adequate for proposed use.

Recommendation

Staff recommends approval of the requested Conditional Use Permit for a proposed 180-foot high self-supported, monopole communications tower and associated walk in cabinet and generator to be located on the subject property located at 2484 SE 68th Avenue, Fourmile Township. The following conditions shall apply:

1. The applicant shall submit a signed detailed site plan drawing from an Iowa Licensed Engineer of the subject property and proposed tower project and the Iowa licensed engineer shall certify that the proposed communication tower design and construction meets minimum safety requirements of the Zoning Ordinance. The construction drawings shall indicate that the communication tower is designed to accommodate additional tower sections to assist future cellular carriers needing to locate their antennas at greater heights.

2. The applicant shall provide a certification by a registered engineer licensed in the State of Iowa that the proposed commercial communication tower is designed, structurally and electrically, to permit at a minimum three (3) antenna systems of comparable size to be added to the original tower.

3. The applicant shall meet Polk County Air Quality Division construction and operation permit requirements for the generator planned within the lease area.

4. The applicant shall keep any dirt, mud and debris from accumulating on adjacent roads during and after construction of the drive, lease area and tower. Building and electrical permits shall also be obtained after the site plan drawing is approved.

5. The applicant shall submit evidence of meeting FCC and FAA requirements.

6. The applicant shall submit a copy of the actual signed lease agreement between the property owner and AT&T. The lease agreement shall include verbiage including the tower removal at the end of the lease agreement or when the tower is no longer used.

7. The Certificate of Use for the proposed communication tower project will not be provided to the applicant until all above items are addressed to the satisfaction of Polk County.

8. A sketch site plan will be required to show the three existing accessory buildings located on the property. The existing accessory sheds will be required to meet a 30-foot separation requiring relocation of the buildings. Permits will also be required for these structures.

Attachment 'A'
Pleasant Hill
2484 SE 68th St
2248
2237
2260
2259
2350
2325
2345
2435
2420
2465
2484
2499
2575
2590
2620
2615
2650
2665
2742
2745
6790
6800
6810
6872
6892
6912
6950
6990
6971
2805
6871
6472
6498
6480
6506
6510
6544
6654
6688
6722
6473
6481
6543
6631
6675
6727
SE 68th St
SE 26th Pl
SE Vandalia Dr
SE 27th Pl
N
W
E
S
0
1,650
3,300
Feet

AT&T MOBILITY

PROJECT: NSB-WIC
AT&T SITE ID: IAL02116
FA#: 10588707
PACE#: MRUMW019938
PTN#: 3529A0AFX4

VANDALIA & 72ND
PLEASANT HILL, IA 50327

SITE PHOTO

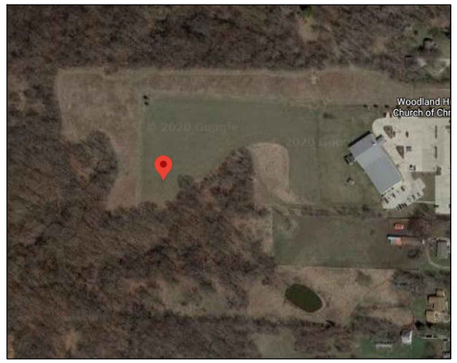

PROJECT INFORMATION

SITE ADDRESS:	6970 SE VANDALIA DR. PLEASANT HILL, IA 50327
COUNTY	POLK
SITE NAME:	VANDALIA & 72ND
AT&T SITE ID	IAL02116
FA NUMBER:	10588707
PACE NUMBER:	MRUMW019938
PTN NUMBER:	3529A0AFX4
USID NUMBER:	192207
LATITUDE (NAD 83):	41° 33' 36.314" N 41.56009°
LONGITUDE (NAD 83):	93° 28' 32.144" W -93.47560°
GROUND ELEVATION:	901.9' A.M.S.L.
ZONING DISTRICT:	AGRICULTURAL TRANSITIONAL
TOWER OWNER:	NA
OWNER SITE NAME:	NA
OWNER SITE NUMBER:	NA
LANDLORD CONTACT:	NA
GROUND OWNER:	WOODLAND HILLS CHURCH OF CHRIST 2484 SOUTHEAST 68TH ST RUNNELLS, IA 50237
OCCUPANCY GROUP:	U
CONSTRUCTION TYPE:	I-B
AT&T PROJECT MANAGER:	TOM HAMLIN (218) 454-0511 TH002A@ATT.COM
B&V SITE ACQUISITION MANAGER:	KRISTINE RICHTER (952) 896-0816 RICHTERK@BV.COM
B&V CONSTRUCTION MANAGER:	JEREMY KINDER (636) 536-5877 KINDERJ@OVERLANDCONTRACTING.COM
B&V LEAD ENGINEER:	TYLER DAVISON (913) 458-9654 DAVISONTM@BV.COM

AREA MAP

VICINITY MAP

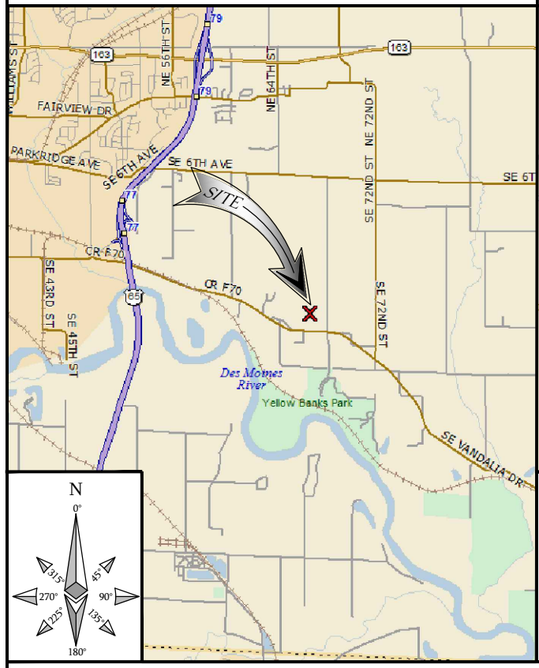

LOCAL MAP

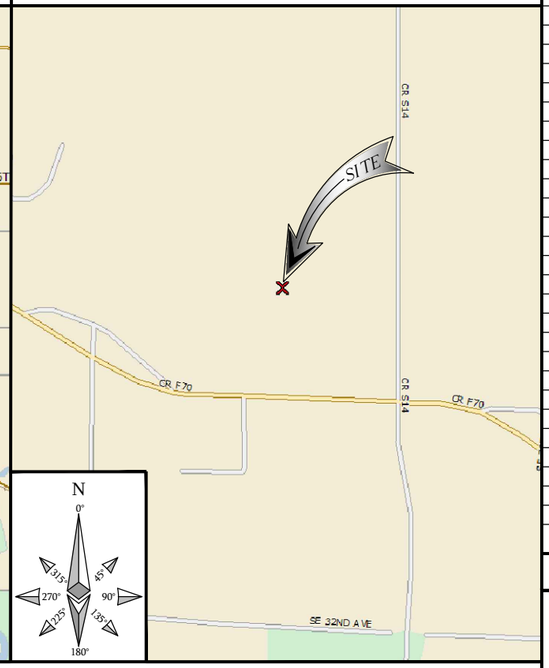

DRIVING DIRECTIONS

DIRECTIONS FROM AT&T OFFICE: GO STRAIGHT (SOUTH) ON SOUTHTOWN DR, GO STRAIGHT (NORTH) ON XERXES AVE S, TURN RIGHT (EAST) ONTO SOUTHTOWN DR, TURN LEFT (NORTH NORTHEAST) ONTO CR 32, TURN RIGHT (EAST) ONTO I-494 RAMP, TAKE EXIT 5B, KEEP RIGHT (SOUTH) ONTO I-35W S RAMP, GO STRAIGHT (SOUTH) ONTO I-35 S, GO STRAIGHT (SOUTH) ONTO I-35 MN/IA STATE BORDER, GO STRAIGHT (SOUTH) ONTO I-35 S, TAKE EXIT 87B, KEEP LEFT (SOUTH) ONTO I-35 N RAMP, GO STRAIGHT (NORTH EAST) ON I-35 N RAMP, TAKE EXIT 137B, KEEP RIGHT (EAST) ONTO I-80 E RAMP, KEEP LEFT (EAST NORTHEAST) ON I-80 E RAMP, TAKE EXIT 141, KEEP RIGHT (SOUTH) ONTO US 65 RAMP, TAKE EXIT 77, KEEP RIGHT (SOUTH) ONTO RAMP, TURN RIGHT (SOUTHWEST) ONTO LOCAL ROAD, GO STRAIGHT (EASTSOUTH EAST) ONTO CR F70, ARRIVE 2484 SOUTHEAST 68TH STREET, RUNNELLS, IA 50237.

ENGINEERING

2015 INTERNATIONAL BUILDING CODE
2017 NATIONAL ELECTRIC CODE
TIA/EIA-222-G OR LATEST EDITION

LICENSED PROFESSIONAL ENGINEER
ROBLEY A. EVANS
20209
IOWA

I HEREBY CERTIFY THAT THIS ENGINEERING DOCUMENT WAS PREPARED BY ME OR UNDER MY DIRECT PERSONAL SUPERVISION AND THAT I AM A DULY LICENSED PROFESSIONAL ENGINEER UNDER THE LAWS OF THE STATE OF IOWA.

(SIGNATURE) (DATE) 06/10/2020

ROBLEY A. EVANS

LICENSE NUMBER 20209

MY LICENSE RENEWAL DATE IS DECEMBER 31, 2021
PAGES OR SHEETS COVERED BY THIS SEAL:

COVER, C-1, C-1.1, C-2, C-3, C-4, C-5, C-6, C-6.1, C-7, C-8, C-9, C-10, T-1, T-2, T-3, T-4, T-5, T-6, T-7, E-1, E-1.1, E-2, E-3, E-4, E-5, E-6, E-7, E-8, N-1, N-2

REFERENCE MATERIALS

THESE LTE DRAWINGS ARE BASED ON AT&T SCOPING DOCUMENT DATED 02/05/20. CONTRACTOR SHALL USE THE LATEST VERSION OF THE RFDS WITH THE CONSTRUCTION DRAWINGS PER THE SCOPE OF WORK.

DRAWING INDEX

SHEET NO:	SHEET TITLE
COVER	TITLE SHEET
C-1	OVERALL SITE PLAN
C-1.1	COMPOUND GRADING PLAN
C-2	COMPOUND PLAN
C-3	WIC PLATFORM WITH GENERATOR
C-4	SITE DETAILS
C-5	SITE DETAILS
C-6	CHAINLINK FENCE DETAILS
C-7	SIGNAGE DETAILS
C-8	SPECIAL INSPECTIONS
C-9	CONCRETE WORK NOTES
C-10	SITE WORK AND DRAINAGE NOTES
T-1	TOWER ELEVATION
T-2	ANTENNA CONFIGURATION
T-3	ANTENNA AND RRH REQUIREMENTS
T-4	TOWER EQUIPMENT DETAILS
T-5	CABLE COLOR CODING
T-6	COAX COLOR CODING
T-7	TOWER SECTION NOTES
E-1	OVERALL ELECTRICAL PLAN
E-2	ELECTRICAL DETAILS
E-3	ONE-LINE GROUNDING DIAGRAM
E-4	COMPOUND GROUNDING DIAGRAM
E-5	GROUNDING DETAILS
E-6	GROUNDING DETAILS
E-7	GROUNDING DETAILS
E-8	ELECTRICAL SECTION NOTES
N-1	LEGEND AND ABBREVIATIONS
N-2	GENERAL NOTES

11"x17" PLOT WILL BE HALF SCALE UNLESS OTHERWISE NOTED

TO OBTAIN LOCATION OF PARTICIPANTS UNDERGROUND FACILITIES BEFORE YOU DIG IN IOWA, CALL IOWA ONE CALL
TOLL FREE: 1-800-292-8989 OR
www.iowaonecall.com
IOWA STATUTE REQUIRES MIN OF 2 WORKING DAYS NOTICE BEFORE YOU EXCAVATE

811

-THESE PLANS CONFORM TO ALL OF THE REQUIREMENTS CALLED OUT IN THE JURISDICTION PLANNING AND ZONING FOR ANTENNAS AND SUPPORT STRUCTURES WHERE SITE IS LOCATED.
-SUBCONTRACTOR SHALL VERIFY ALL PLANS AND EXISTING CONDITIONS ON SITE. IMMEDIATELY NOTIFY ENGINEER OF ANY DISCREPANCIES PRIOR TO PERFORMING ANY WORK OR BE RESPONSIBLE FOR THE SAME

Attachment 'B'

AT&T MOBILITY

7900 XERXES AVE S
3RD FLOOR
BLOOMINGTON MN 55431

BLACK & VEATCH

BLACK & VEATCH CORPORATION
7760 FRANCE AVENUE SOUTH
SUITE 1200
BLOOMINGTON, MN 55435

PROJECT NO:	129041.4117
DRAWN BY:	JKR
CHECKED BY:	JAT

REV	DATE	DESCRIPTION
1	06/08/20	ISSUED FOR CONSTRUCTION
0	04/20/20	ISSUED FOR CONSTRUCTION

LICENSED PROFESSIONAL ENGINEER
ROBLEY A. EVANS
20209
IOWA
06/10/2020

IT IS A VIOLATION OF LAW FOR ANY PERSON, UNLESS THEY ARE ACTING UNDER THE DIRECTION OF A LICENSED PROFESSIONAL ENGINEER, TO ALTER THIS DOCUMENT.

VANDALIA & 72ND
IAL02116
6970 SE VANDALIA DR.
PLEASANT HILL, IA 50327
NSB-WIC

SHEET TITLE
TITLE SHEET

SHEET NUMBER
COVER

THIS DRAWING IS NOT A SITE SURVEY

THE PURPOSE OF THIS DRAWING IS TO SHOW HOW THE DEVELOPED SITE RELATES TO THE PARENT PARCEL AND ADJACENT PROPERTIES.

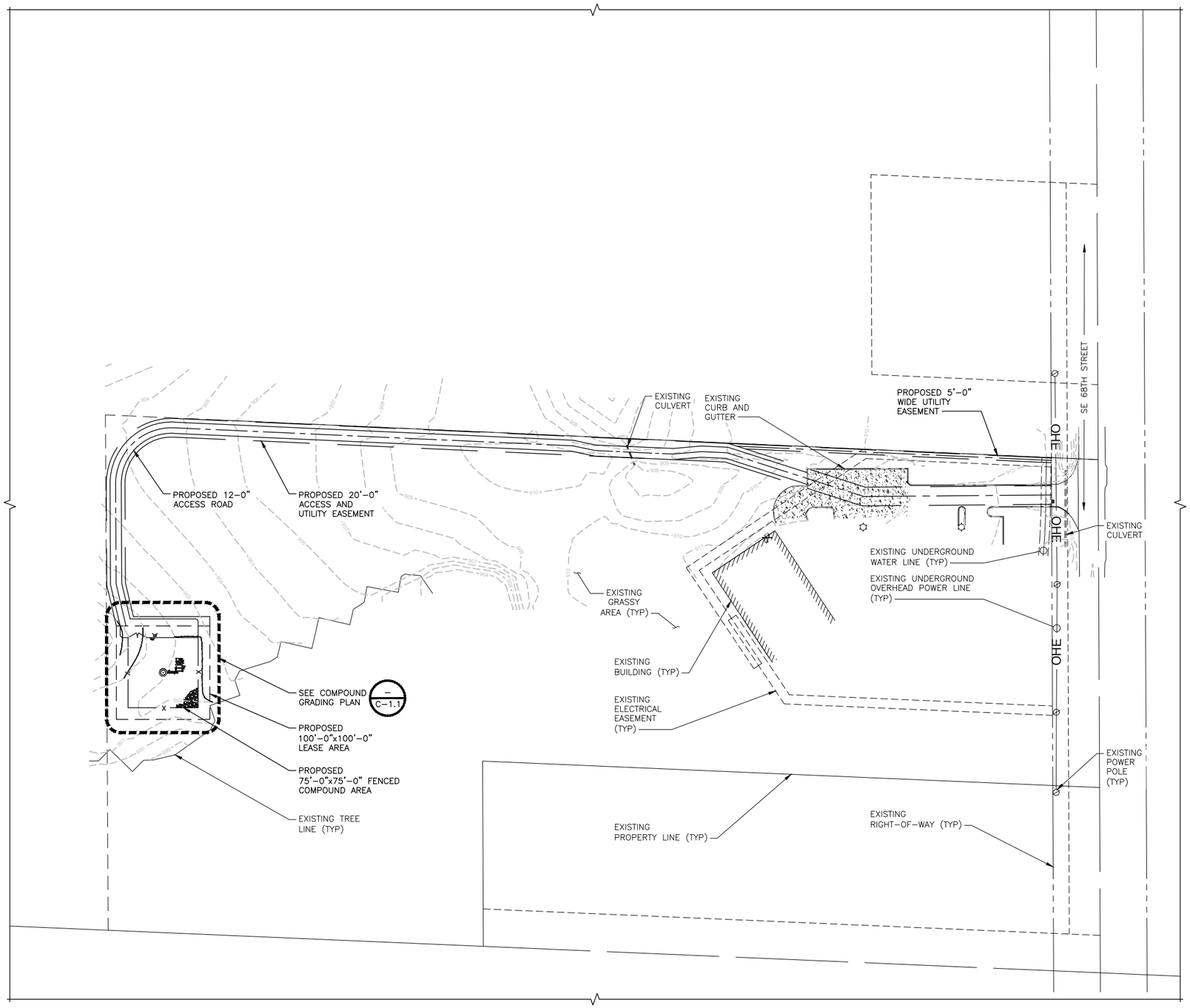

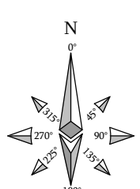

OVERALL SITE PLAN

60' 30' 0 60' 120'
1"=60'

1

AT&T MOBILITY

7900 XERXES AVE S
3RD FLOOR
BLOOMINGTON MN 55431

BLACK & VEATCH

BLACK & VEATCH CORPORATION
7760 FRANCE AVENUE SOUTH
SUITE 1200
BLOOMINGTON, MN 55435

PROJECT NO:	129041.4117
DRAWN BY:	JKR
CHECKED BY:	JAT

REV	DATE	DESCRIPTION
1	06/08/20	ISSUED FOR CONSTRUCTION
0	04/20/20	ISSUED FOR CONSTRUCTION

LICENSED PROFESSIONAL ENGINEER
ROBLEY A. EVANS
20209
IOWA
06/10/2020

IT IS A VIOLATION OF LAW FOR ANY PERSON, UNLESS THEY ARE ACTING UNDER THE DIRECTION OF A LICENSED PROFESSIONAL ENGINEER, TO ALTER THIS DOCUMENT.

VANDALIA & 72ND
IAL02116
6970 SE VANDALIA DR.
PLEASANT HILL, IA 50327
NSB-WIC

SHEET TITLE

OVERALL SITE PLAN

SHEET NUMBER

C-1

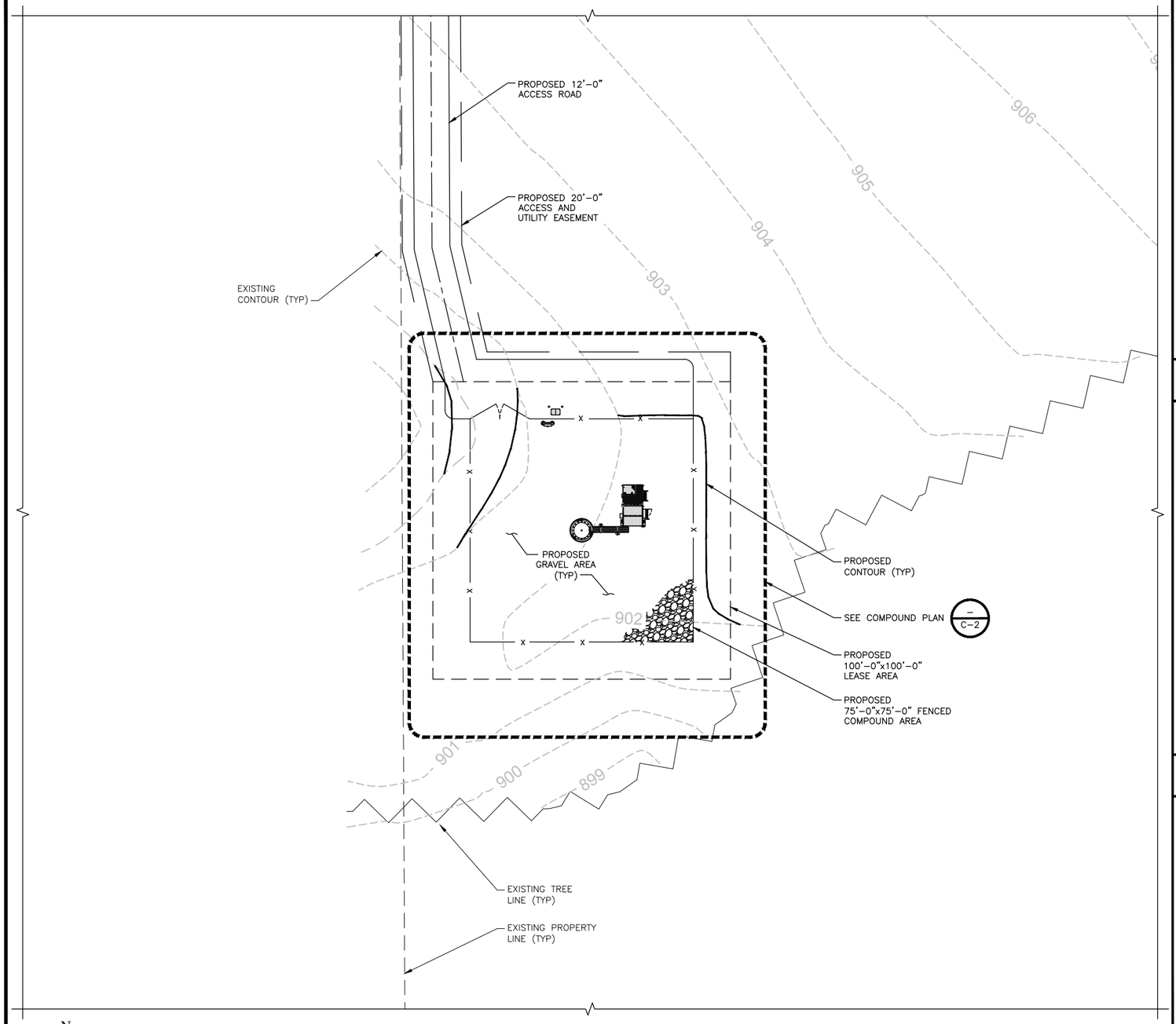

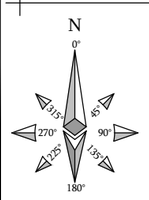

COMPOUND GRADING PLAN

20' 10' 0 20' 40'
1"=20'

1

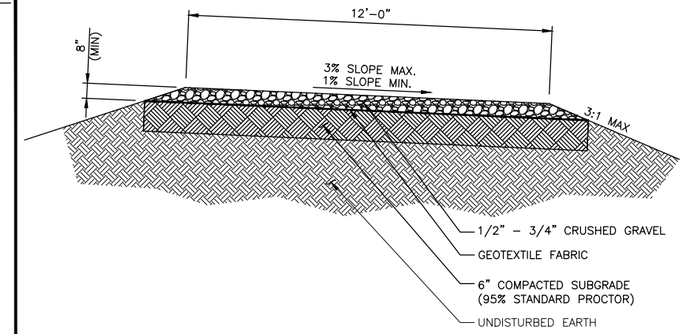

* SPECIAL INSPECTIONS REQUIRED SEE SHEET C-8.

TYPICAL GRAVEL DRIVE DETAIL | NO SCALE | 2

LEGEND

DRAINAGE CONTROL	
EXISTING CONTOUR LINE	
PROPOSED CONTOUR LINE	
PROPERTY LINE	
RIGHT OF WAY LINE	
EASEMENT LINE	
GUYED WIRE	
CHAIN LINK FENCE	x x
PROPOSED ICE BRIDGE	
EXISTING ICE BRIDGE	

NOTES

AT&T MOBILITY

7900 XERXES AVE S
3RD FLOOR
BLOOMINGTON MN 55431

BLACK & VEATCH

BLACK & VEATCH CORPORATION
7760 FRANCE AVENUE SOUTH
SUITE 1200
BLOOMINGTON, MN 55435

PROJECT NO:	129041.4117
DRAWN BY:	JKR
CHECKED BY:	JAT

REV	DATE	DESCRIPTION
1	06/08/20	ISSUED FOR CONSTRUCTION
0	04/20/20	ISSUED FOR CONSTRUCTION

LICENSED PROFESSIONAL ENGINEER
ROBLEY A. EVANS
20209
IOWA
06/10/2020

IT IS A VIOLATION OF LAW FOR ANY PERSON, UNLESS THEY ARE ACTING UNDER THE DIRECTION OF A LICENSED PROFESSIONAL ENGINEER, TO ALTER THIS DOCUMENT.

VANDALIA & 72ND
IAL02116
6970 SE VANDALIA DR.
PLEASANT HILL, IA 50327
NSB-WIC

SHEET TITLE

COMPOUND GRADING PLAN

SHEET NUMBER

C-1.1

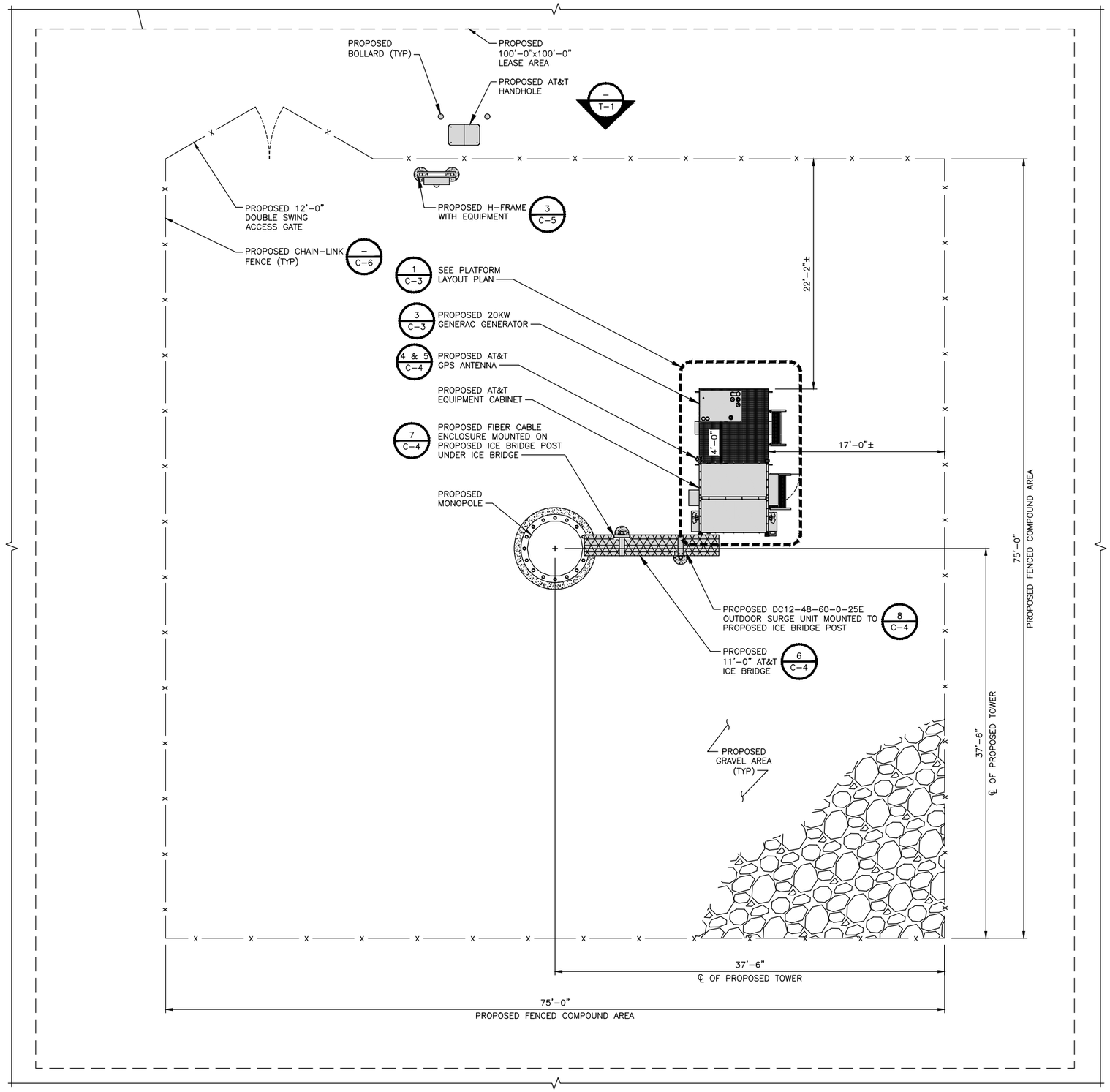

COMPOUND PLAN

6' 4' 2' 0 5' 10'
3/16"=1'-0"

1

THIS IS NOT AN ALL INCLUSIVE LIST. CONTRACTOR SHALL UTILIZE SPECIFIED EQUIPMENT PART OR ENGINEER APPROVED EQUIVALENT. CONTRACTOR SHALL VERIFY ALL NEEDED EQUIPMENT TO PROVIDE A FUNCTIONAL SITE.

THE PROJECT GENERALLY CONSISTS OF THE FOLLOWING:

PROPOSED-TOWER:
INSTALL (1) SABRE C10855721C MONOPOLE PLATFORM (OR ENGINEER APPROVED EQUAL)
INSTALL (3) KMW EPBQ-654L8H8-B ANTENNAS
INSTALL (3) KMW EPBQ-654L8H8-L2 ANTENNAS
INSTALL (9) AIRSCALE LTE RRH UNITS
INSTALL (1) RAYCAP DC9-48-60-24-8C-EV SURGE UNIT
INSTALL (3) DC POWER TRUNKS
INSTALL (1) FIBER TRUNK

PROPOSED-PLATFORM:
INSTALL (1) VERTIV XTE 801 CABINET, W/EQUIPMENT (NEQ200060)
INSTALL (1) GPS KIT
INSTALL (1) 20KW GENERAC GENERATOR WITH PLATFORM

PROPOSED-SITE:
INSTALL (1) ROSENBERGER FB-15-ABOX FIBER ENCLOSURE
INSTALL (1) RAYCAP DC12-48-60-0-25E OUTDOOR SURGE
INSTALL APPROXIMATELY 11 LF OF ICE BRIDGE

AT&T TO VERIFY REQUIRED SHELTER EQUIPMENT.

PROJECT DESCRIPTION

1. CONTRACTOR SHALL FIELD VERIFY ALL DIMENSIONS.
2. CONTRACTOR SHALL MAINTAIN A 10'-0" MINIMUM SEPARATION BETWEEN THE PROPOSED LTE GPS ANTENNA AND TRANSMITTING ANTENNAS.
3. PROPERTY LINES ARE APPROXIMATIONS ONLY.
4. ANTENNAS & MOUNTS OMITTED FOR CLARITY.
5. FOR FIBER TRUNK REF AT&T LTE GUIDE LINES REV. 1.9 PAGE 13 TABLE 2.1.2.
6. FOR DC POWER CABLE TRUNK REF AT&T LTE GUIDE LINES REV 1.9 PAGE 14 TABLE 2.1.3

NOTES

WOOD FENCE
CHAIN LINK FENCE
PROPOSED ICE BRIDGE
EXISTING ICE BRIDGE

LEGEND

AT&T MOBILITY

7900 XERXES AVE S
3RD FLOOR
BLOOMINGTON MN 55431

BLACK & VEATCH

BLACK & VEATCH CORPORATION
7760 FRANCE AVENUE SOUTH
SUITE 1200
BLOOMINGTON, MN 55435

PROJECT NO:	129041.4117
DRAWN BY:	JKR
CHECKED BY:	JAT

REV	DATE	DESCRIPTION
1	06/08/20	ISSUED FOR CONSTRUCTION
0	04/20/20	ISSUED FOR CONSTRUCTION

LICENSED PROFESSIONAL ENGINEER
ROBLEY A. EVANS
20209
IOWA
06/10/2020

IT IS A VIOLATION OF LAW FOR ANY PERSON, UNLESS THEY ARE ACTING UNDER THE DIRECTION OF A LICENSED PROFESSIONAL ENGINEER, TO ALTER THIS DOCUMENT.

VANDALIA & 72ND
IAL02116
6970 SE VANDALIA DR.
PLEASANT HILL, IA 50327
NSB-WIC

SHEET TITLE
COMPOUND PLAN

SHEET NUMBER
C-2

ELECTRO MECHANICAL INDUSTRIES EQUIPMENT PLATFORM WITH HELICAL MOUNT KIT

WEIGHT: 10431.47 lbs.

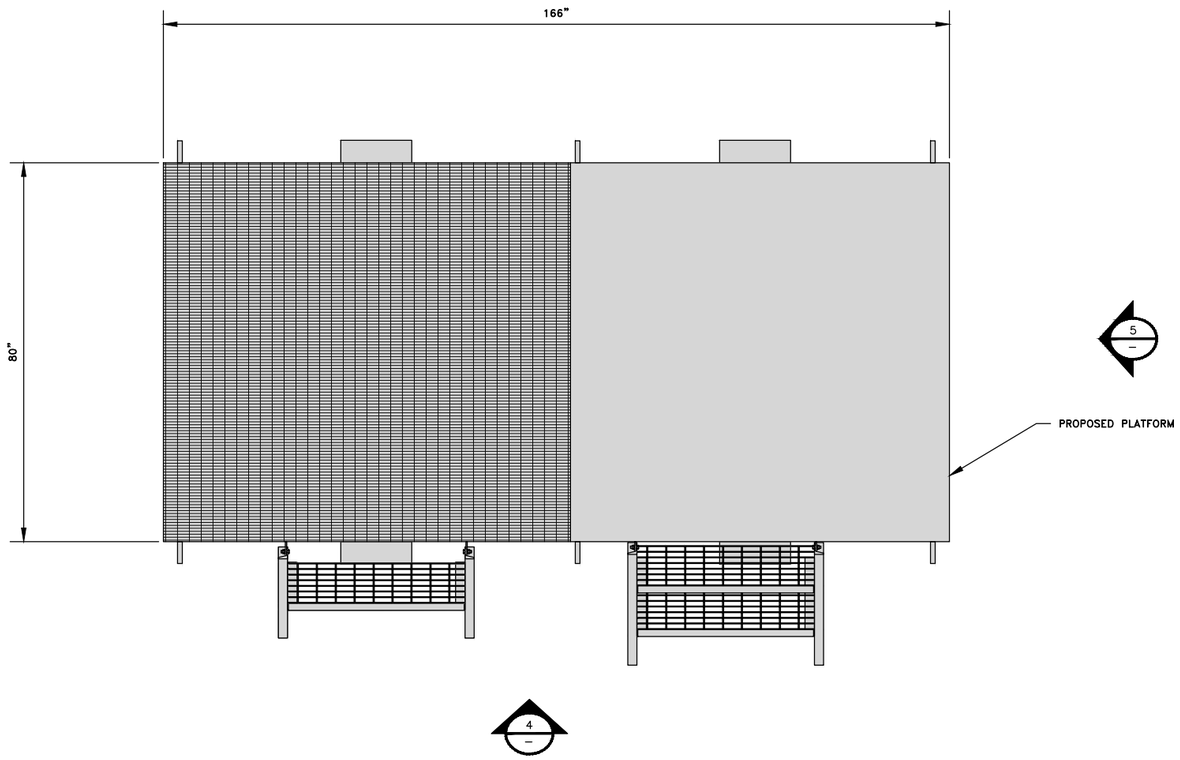

WIC COMBO GENERATOR PLATFORM HELICAL MOUNT KIT (PLAN) | NO SCALE | 1

VERTIV – XTE 801, 6'x6' WALK IN CABINET (WIC)

DIMENSIONS, HxWxD: 113.0"x80.0"x80.0" (EXTERNAL)
105.0"x72.0"x72.0" (INTERNAL)

WEIGHT: ~4000 lbs (EMPTY)
~7000 lbs (FULL)

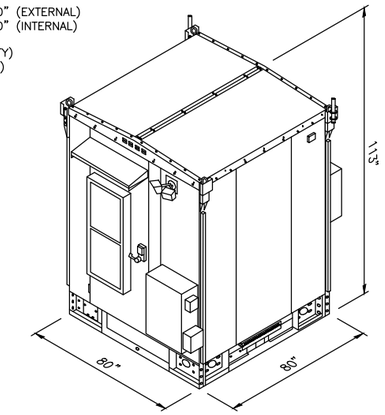

WALK IN CABINET DETAIL | NO SCALE | 2

GENERAC G007098-0 20KW GENERATOR

DIMENSIONS LxWxH: 48"x36"x90" (1219.2x914x2286mm)

WEIGHT: 2,400 lbs (1,089 kg)

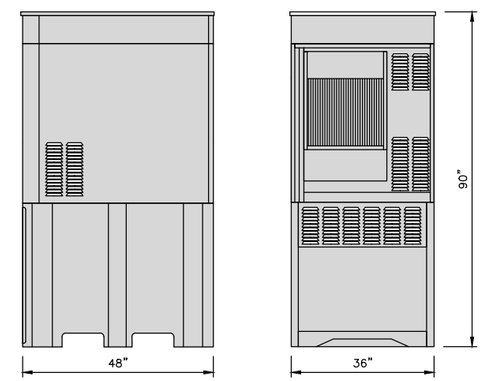

GENERATOR DETAIL | NO SCALE | 3

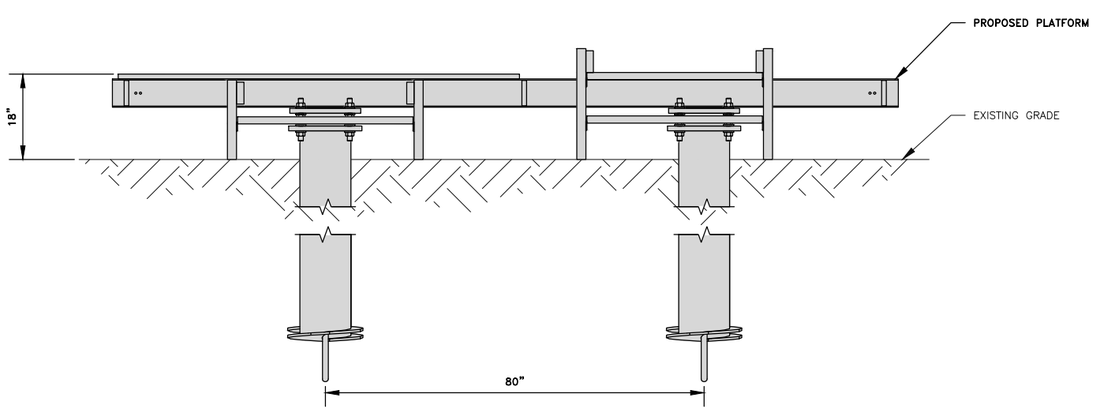

WIC COMBO GENERATOR PLATFORM HELICAL MOUNT KIT (FRONT ELEVATION) | NO SCALE | 4

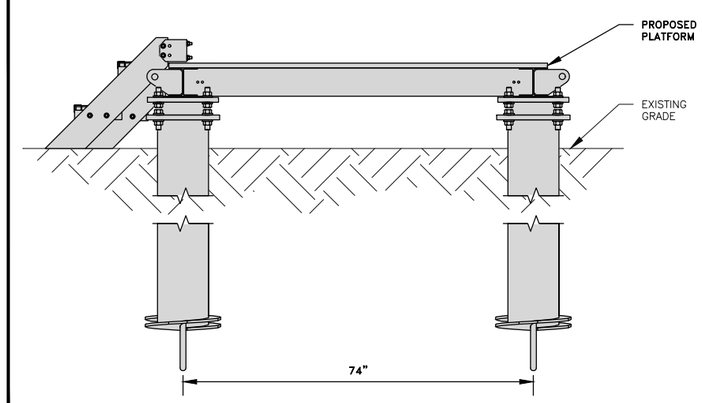

WIC COMBO GENERATOR PLATFORM HELICAL MOUNT KIT (SIDE ELEVATION) | NO SCALE | 5

AT&T MOBILITY

7900 XERXES AVE S
3RD FLOOR
BLOOMINGTON MN 55431

BLACK & VEATCH

BLACK & VEATCH CORPORATION
7760 FRANCE AVENUE SOUTH
SUITE 1200
BLOOMINGTON, MN 55435

PROJECT NO:	129041.4117
DRAWN BY:	JKR
CHECKED BY:	JAT

REV	DATE	DESCRIPTION
1	06/08/20	ISSUED FOR CONSTRUCTION
0	04/20/20	ISSUED FOR CONSTRUCTION

LICENSED PROFESSIONAL ENGINEER
ROBLEY A. EVANS
20209
IOWA
06/10/2020

IT IS A VIOLATION OF LAW FOR ANY PERSON, UNLESS THEY ARE ACTING UNDER THE DIRECTION OF A LICENSED PROFESSIONAL ENGINEER, TO ALTER THIS DOCUMENT.

VANDALIA & 72ND
IAL02116
6970 SE VANDALIA DR.
PLEASANT HILL, IA 50327
NSB-WIC

SHEET TITLE
WIC PLATFORM W/GENERATOR

SHEET NUMBER
C-3

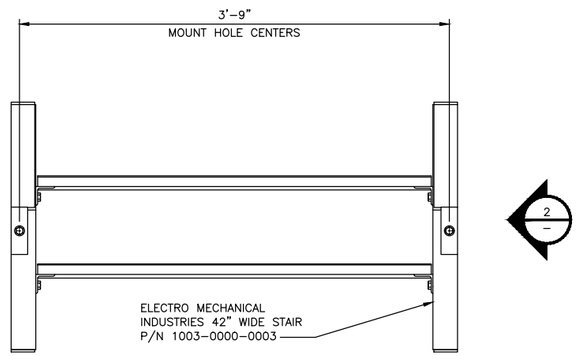

WIC STAIRS FRONT ELEVATION | NO SCALE | 1

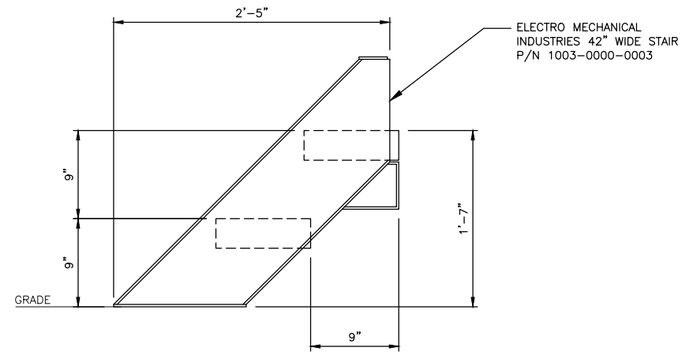

WIC STAIRS SIDE ELEVATION | NO SCALE | 2

NOT USED | NO SCALE | 3

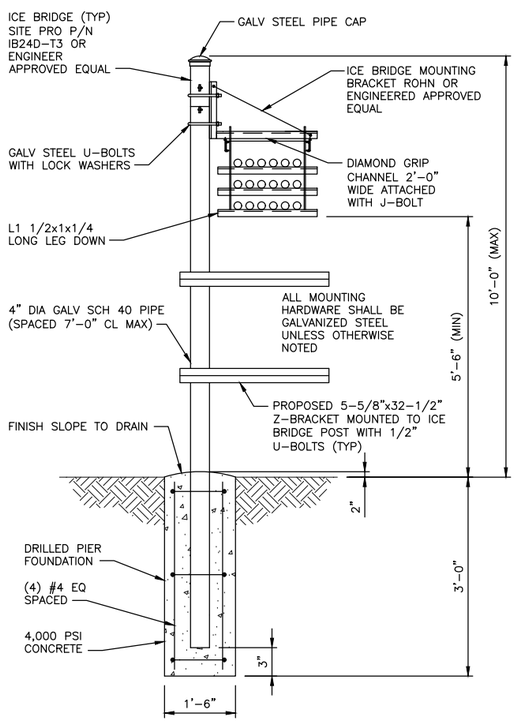

ICE BRIDGE DETAIL | NO SCALE | 6

1. IT IS CRITICAL THAT THE GPS ANTENNA IS MOUNTED SUCH THAT IT IS WITHIN 2 DEGREES OF VERTICAL AND THE BASE OF THE ANTENNA IS WITHIN 2 DEGREES OF LEVEL.
2. DO NOT SWEEP TEST GPS ANTENNA.
3. PLACE PROPOSED GPS ANTENNA A MIN. OF 10' (3 METER) HORIZONTALLY FROM ALL EXISTING TRANSMITTING ANTENNAS.
4. THE GPS ANTENNA MOUNT IS DESIGNED TO FASTEN TO A STANDARD 3/4" DIAMETER, SCHEDULE 40, GALVANIZED STEEL OR STAINLESS STEEL PIPE. THE PIPE MUST NOT BE THREADED AT THE ANTENNA MOUNT END. THE PIPE SHALL BE CUT TO THE REQUIRED LENGTH (MINIMUM OF 18") USING A HAND OR ROTARY PIPE CUTTER TO ASSURE A SMOOTH AND PERPENDICULAR CUT. A HACK SAW SHALL NOT BE USED. THE CUT PIPE END SHALL BE DEBURRED AND SMOOTH EDGES IN ORDER TO SEAL AGAINST THE NEOPRENE GASKET ATTACHED TO THE ANTENNA MOUNT.

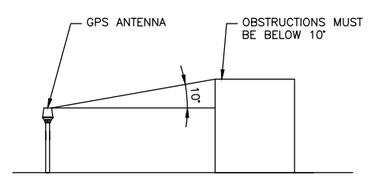

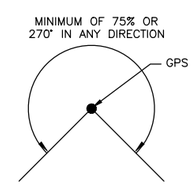

GPS SPECIFICATIONS | NO SCALE | 4

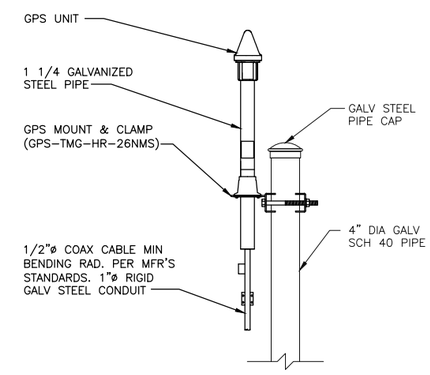

LTE GPS ANTENNA PIPE MOUNT DETAIL | NO SCALE | 5

ROSENBERGER FB-15-ABOX

DIMENSIONS, WxHxD:	18"x18"x3" (457x457x76mm) PLUS MOUNTING
ENCLOSURE TYPE:	ALUMINUM, NON-PAINTED
CABLE I/O:	CABLES CAN ENTER ANY OF THE 4 SIDES CABLES CAN EXIT ANY OF THE REMAINING 3 SIDES
MOUNTING:	WALL, H-BRACKET OR PIPE UP TO 3.5" O.D.
CAPACITY:	35 METERS OF 10MM FIBER TRUNK CABLE OR 75 METERS OF 7 MM FIBER JUMPER CABLE
TOTAL WEIGHT:	7 lbs (3.18 kg)

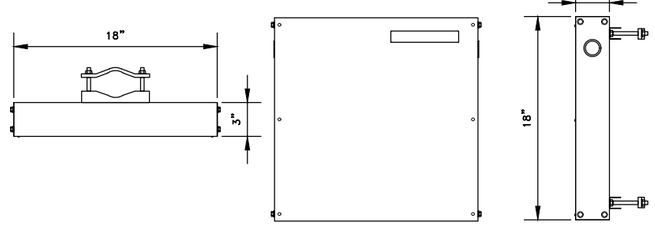

EXTERIOR FIBER CABLE ENCLOSURE | NO SCALE | 7

RAYCAP DC12-48-60-0-25E

DIMENSIONS, WxHxD:	24"x24"x8" (609.6x609.6x203.2mm)
ENCLOSURE TYPE:	NEMA 4 RATED
INPUT SIZE QUANTITY & SIZE:	(4) 2.0" CONDUIT FITTINGS (4) M63 CABLE GLANDS
NOMINAL OPERATING VOLTAGE:	48 VDC
NOMINAL DISCHARGE CURRENT:	20 KA 8/20MS
MAXIMUM DISCHARGE CURRENT:	60 KA 8/20MS
MAXIMUM CONTINUOUS OPERATING VOLTAGE:	75 VDC
VOLTAGE PROTECTION RATING:	400 V
TOTAL WEIGHT:	56.3 LBS

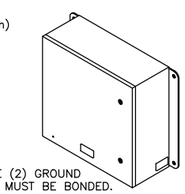

NOTE:
THERE ARE (2) GROUND AND BOTH MUST BE BONDED.

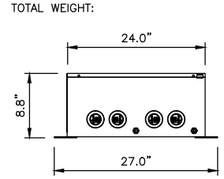

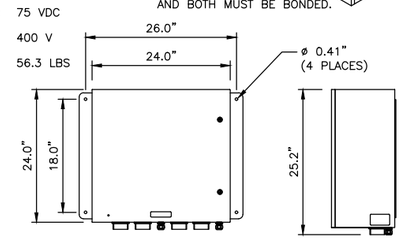

OUTDOOR DC SURGE PROTECTION SOLUTION | NO SCALE | 8

AT&T MOBILITY

7900 XERXES AVE S
3RD FLOOR
BLOOMINGTON MN 55431

BLACK & VEATCH

BLACK & VEATCH CORPORATION
7760 FRANCE AVENUE SOUTH
SUITE 1200
BLOOMINGTON, MN 55435

PROJECT NO:	129041.4117
DRAWN BY:	JKR
CHECKED BY:	JAT

REV	DATE	DESCRIPTION
1	06/08/20	ISSUED FOR CONSTRUCTION
0	04/20/20	ISSUED FOR CONSTRUCTION

LICENSED PROFESSIONAL ENGINEER
ROBLEY A. EVANS
20209
IOWA
06/10/2020

IT IS A VIOLATION OF LAW FOR ANY PERSON, UNLESS THEY ARE ACTING UNDER THE DIRECTION OF A LICENSED PROFESSIONAL ENGINEER, TO ALTER THIS DOCUMENT.

VANDALIA & 72ND
IAL02116
6970 SE VANDALIA DR.
PLEASANT HILL, IA 50327
NSB-WIC

SHEET TITLE
SITE DETAILS

SHEET NUMBER
C-4

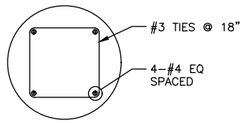

H–FRAME FOOTING | NO SCALE | 1

1. ALL UNDERGROUND CONDUITS SHALL BE SCH 40 PVC. EXCEPT THAT ELBOWS AND RISERS SHALL BE RMC ALL UNDERGROUND ELBOWS SHALL BE SWEEPING BENDS. 2'–0" MINIMUM SHALL BE REQUIRED.
2. THE TELEPHONE SERVICE CABLES SHOULD BE INSTALLED IN RIGID METAL CONDUIT, (10'–0") TEN FEET IN LENGTH BEFORE ENTERING A SHELTER OR BUILDING PER AT&T STANDARD ATT–TP 26416.
3. THREE CONDUITS ARE SHOWN BELOW, ALTHOUGH MULTIPLE CONDUITS CAN BE PLACED IN THE SAME TRENCH. A MINIMUM SEPARATION IS REQUIRED PER THE LOCAL JURISDICTIONS AND UTILITY COMPANIES. IN ALL OTHER CASES, USE THE CONDUIT SPACING SCHEDULE TO MAINTAIN MINIMUM SPACING BETWEEN THE EXTERIOR WALL TO EXTERIOR WALL SEPARATION OF CONDUITS.
4. CONTRACTOR SHALL RESTORE THE TRENCH TO ITS ORIGINAL CONDITIONS BY EITHER SEEDING OR SODDING GRASS AREAS, OR REPLACING ASPHALT OR CONCRETE AREAS TO ITS ORIGINAL CROSS SECTION.
5. TRENCHING SAFETY; INCLUDING, BUT NOT LIMITED TO SOIL CLASSIFICATION, SLOPING, AND SHORING, SHALL BE GOVERNED BY THE CURRENT OSHA TRENCHING AND EXCAVATION SAFETY STANDARDS.
6. ALL CONDUITS SHALL BE INSTALLED IN COMPLIANCE WITH THE NATIONAL ELECTRIC CODE (NEC) OR AS REQUIRED BY THE LOCAL JURISDICTION.

DETAILS:

1. OUTSIDE OF COMPOUND –DEPTH 36" MIN. FROM TOP OF CONDUIT.
2. INSIDE COMPOUND –DEPTH 18" MIN. FROM TOP OF CONDUIT AS SPECIFIED.

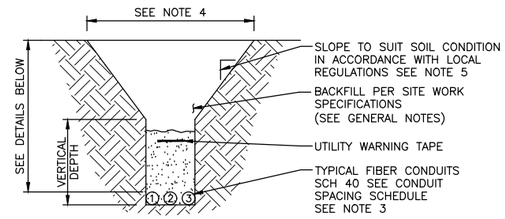

TYPICAL UNDERGROUND TRENCH DETAIL AND NOTES | NO SCALE | 2

NOTES

1. ADDITIONAL UNISTRUT REQUIRED FOR INSTALLATION OF EQUIPMENT ON BACK OF PPC RACK.
2. LIGHTING PANEL – MAIN LUGS ONLY, WITH (6) SIX POLES. PROVIDE AND INSTALL (6) SIX SINGLE POLE 20AMP BREAKERS.

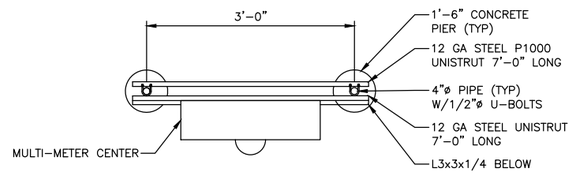

H–FRAME PLAN VIEW
NO SCALE

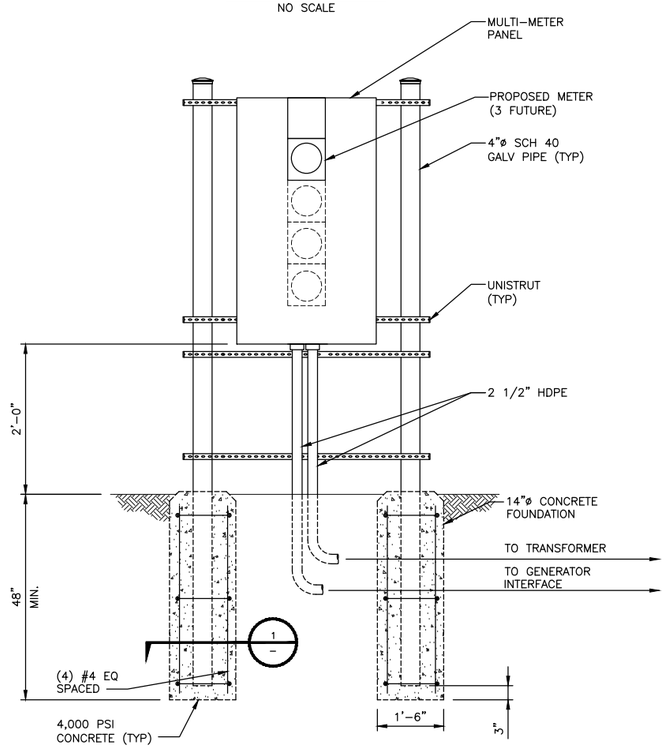

H–FRAME DETAIL | NO SCALE | 3

NOT USED | 4

AT&T MOBILITY

7900 XERXES AVE S
3RD FLOOR
BLOOMINGTON MN 55431

BLACK & VEATCH

BLACK & VEATCH CORPORATION
7760 FRANCE AVENUE SOUTH
SUITE 1200
BLOOMINGTON, MN 55435

PROJECT NO:	129041.4117
DRAWN BY:	JKR
CHECKED BY:	JAT

REV	DATE	DESCRIPTION
1	06/08/20	ISSUED FOR CONSTRUCTION
0	04/20/20	ISSUED FOR CONSTRUCTION

LICENSED PROFESSIONAL ENGINEER
ROBLEY A. EVANS
20209
IOWA
06/10/2020

IT IS A VIOLATION OF LAW FOR ANY PERSON, UNLESS THEY ARE ACTING UNDER THE DIRECTION OF A LICENSED PROFESSIONAL ENGINEER, TO ALTER THIS DOCUMENT.

VANDALIA & 72ND
IAL02116
6970 SE VANDALIA DR.
PLEASANT HILL, IA 50327
NSB–WIC

SHEET TITLE
SITE DETIALS

SHEET NUMBER
C-5

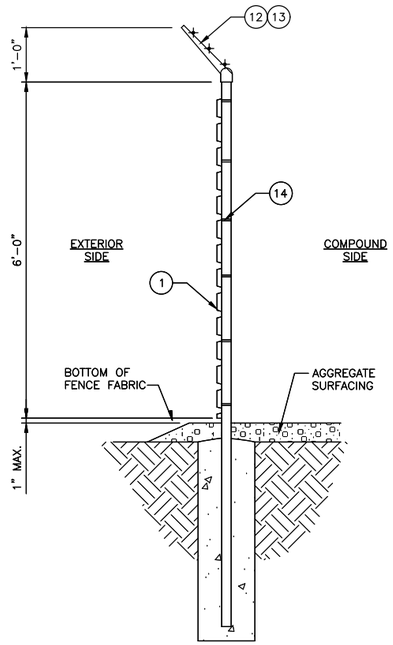

CHAINLINK FENCE SECTION | NO SCALE | 1

MATERIAL DESCRIPTION

1. CHAIN LINK RESIDENTIAL FABRIC: 11–1/2 GAUGE, 2–1/4" MESH; GALVANIZED ASTM–A392, CLASS 2; TWISTED SELVAGE ON TOP, KNUCKLED ON BOTTOM.
2. LINE POSTS: 2–1/2" O.D. PIPE, 16 GAUGE (GALVANIZED) PER ASTM–F1083.
3. CORNER, END AND BRACE POSTS: 2–7/8" O.D. PIPE, SCHEDULE 40 (GALVANIZED).
4. TOP RAIL: 1–5/8" O.D. 17 GAUGE PIPE (GALVANIZED) PER ASTM–F1083.
5. BRACE RAIL: 1–5/8" O.D. 17 GAUGE PIPE (GALVANIZED).
6. DIAGONAL TRUSS ROD: 3/8" GALVANIZED ROD WITH TURNBUCKLE.
7. TENSION BAR: 3/16" X 3/4" GALVANIZED FLAT BAR.
8. BOTTOM TENSION WIRE: GALVANIZED OR ALUMINUM COATED COIL SPRING WIRE, 7 GAUGE.
9. GATE POSTS: 2–7/8" O.D. SCHEDULE 40 PIPE (GALVANIZED).
10. COMBINATION PADLOCK ACCORDING TO AT&T REQUIREMENTS.
11. GATE FRAMES: 1–7/8" O.D. SCHEDULE 40 PIPE (GALVANIZED).
12. BARBED WIRE SUPPORT ARM: SINGLE ARM TYPE (GALVANIZED). ARM SHALL BE INCLINED OUTWARD AT AN ANGLE OF 45 DEGREES.
13. BARBED WIRE: GALVANIZED, ASTM A121 CLASS 3; THREE 14 GAUGE MINIMUM STEEL WIRES WITH 4 POINT ROUND 14 GAUGE BARBS SPACED 4" APART.
14. FABRIC TIES: ALUMINUM BANDS OR WIRES. FABRIC SHALL BE ATTACHED TO THE TOP RAIL AND BOTTOM TENSION WIRE AT 24" CENTERS AND TO THE POSTS AT 15" CENTERS, ALL ON THE COMPOUND SIDE OF THE FENCE.
15. MISCELLANEOUS:
    - A. RAIL COUPLINGS: SLEEVE TYPE, 6" LONG EXPANSION SPRING EVERY FIFTH COUPLING.
    - B. POST TOPS: PRESSED STEEL, MALLEABLE IRON WITH PRESSED STEEL EXTENSION ARM, OR ONE–PIECE ALUMINUM CASTING; WITH HOLE FOR TOP, ALL DESIGNED TO FIT OVER THE OUTSIDE OF THE POSTS AND TO PREVENT ENTRY OF MOISTURE INTO TUBULAR POSTS.
    - C. LATCHES SHALL BE FORKED TYPE AND SHALL BE ARRANGED FOR PADLOCKING WITH THE PADLOCK ACCESSIBLE FROM BOTH SIDES OF THE GATE.
    - D. KEEPERS SHALL CONSIST OF MECHANICAL DEVICES FOR SECURING AND SUPPORTING THE FREE END OF THE GATES WHEN IN THE FULL OPEN POSITION. KEEPERS SHALL BE MOUNTED ON 2–7/8" O.D. PIPE POSTS FILLED WITH CONCRETE AND SET IN CONCRETE FOUNDATIONS.
    - E. INSTALL FENCING PER ASTM–F567.
    - F. INSTALL SWING GATES PER ASTM–F900.
    - G. LOCAL ORDINANCE OF BARBED WIRE PERMIT REQUIREMENT SHALL BE COMPLETED IF REQUIRED.
    - H. USE GALVANIZED HIG–RING WIRE TO MOUNT ALL SIGNS.
    - I. ALL SIGNS MUST BE MOUNTED ON INSIDE OF FENCE.
    - J. ALL POSTS SHALL HAVE "MUSHROOM" SLEEVE EMBEDDED IN CONCRETE.

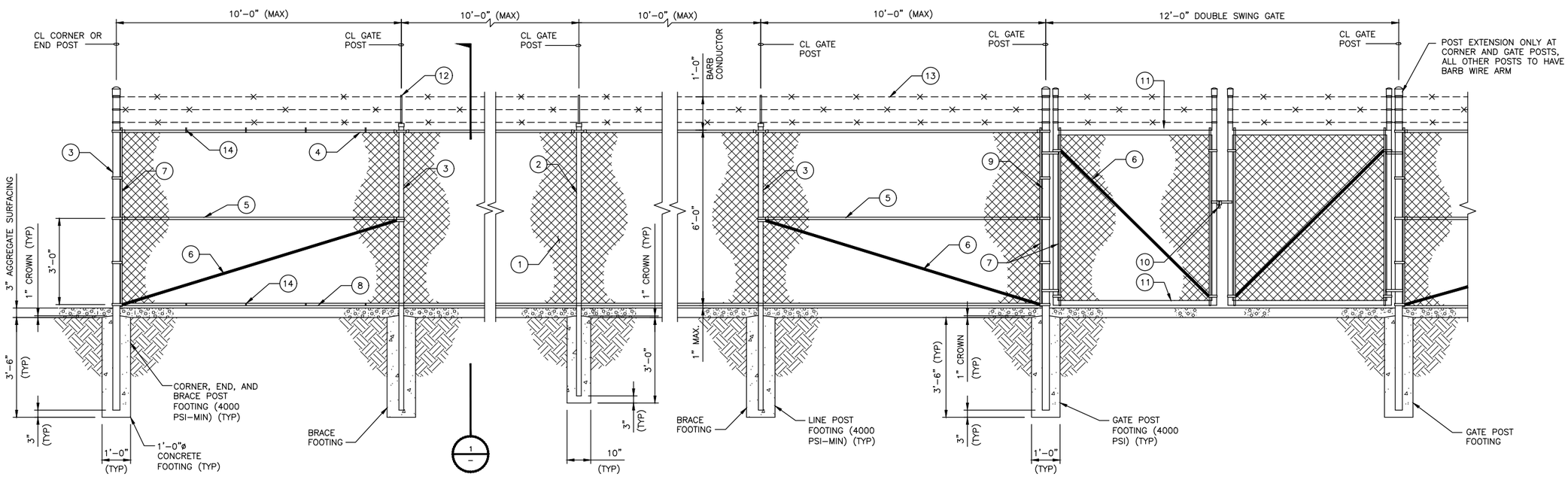

CHAINLINK FENCE ELEVATION | NO SCALE | 2

AT&T MOBILITY

7900 XERXES AVE S
3RD FLOOR
BLOOMINGTON MN 55431

BLACK & VEATCH

BLACK & VEATCH CORPORATION
7760 FRANCE AVENUE SOUTH
SUITE 1200
BLOOMINGTON, MN 55435

PROJECT NO:	129041.4117
DRAWN BY:	JKR
CHECKED BY:	JAT

REV	DATE	DESCRIPTION
1	06/08/20	ISSUED FOR CONSTRUCTION
0	04/20/20	ISSUED FOR CONSTRUCTION

LICENSED PROFESSIONAL ENGINEER
ROBLEY A. EVANS
20209
IOWA
06/10/2020

IT IS A VIOLATION OF LAW FOR ANY PERSON, UNLESS THEY ARE ACTING UNDER THE DIRECTION OF A LICENSED PROFESSIONAL ENGINEER, TO ALTER THIS DOCUMENT.

VANDALIA & 72ND
IAL02116
6970 SE VANDALIA DR.
PLEASANT HILL, IA 50327
NSB–WIC

SHEET TITLE
CHAINLINK FENCE DETAILS

SHEET NUMBER
C-6

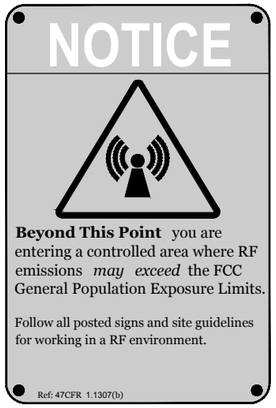

ALERTING SIGNS

ALERTING SIGN
(FOR CELL SITE BATTERIES)

ALERTING SIGN
(FOR DIESEL FUEL)

ALERTING SIGN
(FOR PROPANE)

ALERTING SIGN

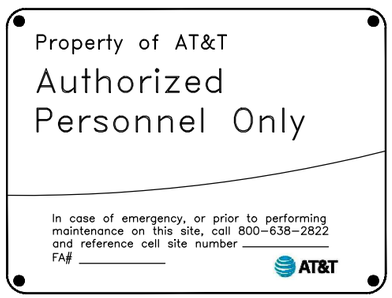

INFO SIGN #4

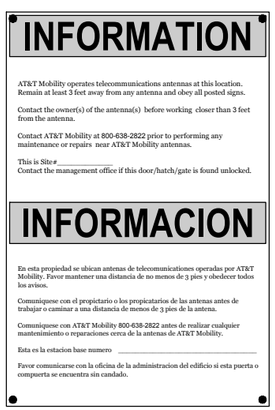

INFO SIGN #1

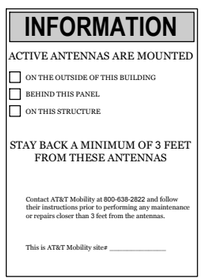

INFO SIGN #2

INFO SIGN #3

GENERAL SIGNAGE GUIDELINES

Structure Type	INFO SIGN #1	INFO SIGN #2	INFO SIGN #3	INFO SIGN #4	Striping	NOTICE SIGN	CAUTION SIGN
Towers							
Monopole/Monopine/Monopalm	entrance gates, shelter doors **OR** on the outdoor cabinets	climbing side of the Tow er	On backside of Antennas	entrance gates, shelter doors **OR** on the outdoor cabinets			At the height of the first climbing step, min. 9ft above ground
SCE Tow ers/ Tow ers w ith high voltage	entrance gates, shelter doors **OR** on the outdoor cabinets	climbing side of the Tow er	On backside of Antennas	entrance gates, shelter doors **OR** on the outdoor cabinets			At the height of the first climbing step, min. 9ft above ground
Light Poles / Flag Poles	entrance gates, shelter doors **OR** on the outdoor cabinets	on the pole, no less than 3ft below the Antenna and no less than 9ft above ground	On backside of Antennas	entrance gates, shelter doors **OR** on the outdoor cabinets			
Utility Wood Poles (JPA)	entrance gates, shelter doors **OR** on the outdoor cabinets	on the pole, no less than 3ft below the Antenna and no less than 9ft above ground	On backside of Antennas	entrance gates, shelter doors **OR** on the outdoor cabinets		If GP max value of MPE at antenna level is: 0-99%: Notice sign; over 99%: Caution sign at no less than 3ft below antenna and 9ft above ground	
Microcells mounted on non-JPA poles	entrance gates, shelter doors **OR** on the outdoor cabinets	on the pole, no less than 3ft below the Antenna and no less than 9ft above ground	On backside of Antennas	entrance gates, shelter doors **OR** on the outdoor cabinets		Notice or Caution sign at no less than 9ft above ground: only if the exposure exceeds 90% of the General Public exposure at 6ft above ground or at outside surface of adjacent buildings	
Roof Tops							
At all access points to the roof	X			X			
On Antennas	X		X	X			
Concealed Antennas	X	X		X			
antennas mounted facing outside the building	X	X		X			
antennas on support structure	X	X		X			
Roofview Graph:							
Radiation area is w ithin 3ft from antenna	X	adjacent to each antenna		X		either Notice or Caution sign (based on Roofview results) at antennas/barrier	
Radiation area is beyond 3ft from antenna	X	adjacent to each antenna		X	diagonal, yellow striping as to Roofview graph		
Church Steeples	Access to steeple	adjacent to antennas if antennas are concealed	On backside of Antennas	Access to steeple			Caution sign at the antennas
Water Stations	Access to ladder	adjacent to antennas if antennas are concealed	On backside of Antennas	Access to ladder			Caution sign beside Info sign #1, min. 9ft above ground

Notes for Rooftop sites:

1. Either NOTICE or CAUTION signs need to be posted at each sector as close as possible to: the outer edge of the striped off area or the outer antennas of the sector.
2. If Roofview show s: only blue = Notice Sign, blue and yellow = Caution Sign, only yellow = Caution Sign to be installed.
3. Should the required striping area interfere w ith any structures or equipment (A/C, vents, roof hatch, doors, other antennas, dishes, etc.), please notify AT&T to modify the striping area, prior to starting the w ork

SIGNAGE GUIDELINES CHART

AT&T MOBILITY

7900 XERXES AVE S
3RD FLOOR
BLOOMINGTON MN 55431

BLACK & VEATCH

BLACK & VEATCH CORPORATION
7760 FRANCE AVENUE SOUTH
SUITE 1200
BLOOMINGTON, MN 55435

PROJECT NO:	129041.4117
DRAWN BY:	JKR
CHECKED BY:	JAT

REV	DATE	DESCRIPTION
1	06/08/20	ISSUED FOR CONSTRUCTION
0	04/20/20	ISSUED FOR CONSTRUCTION

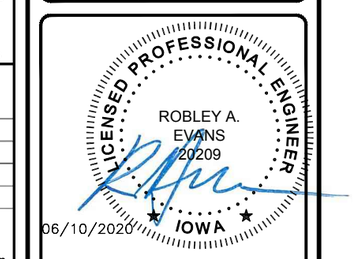

IT IS A VIOLATION OF LAW FOR ANY PERSON, UNLESS THEY ARE ACTING UNDER THE DIRECTION OF A LICENSED PROFESSIONAL ENGINEER, TO ALTER THIS DOCUMENT.

VANDALIA & 72ND
IAL02116
6970 SE VANDALIA DR.
PLEASANT HILL, IA 50327
NSB-WIC

SHEET TITLE

SIGNAGE DETAILS

SHEET NUMBER

C-7

LIST OF SPECIAL INSPECTIONS

	LIST OF ITEMS REQUIRING SPECIAL INSPECTIONS
•	INSPECTION OF REINFORCING STEEL, INCLUDING PRE–STRESSING TENDONS, AND PLACEMENT PER SECTION 1910.4 OF THE IBC.
•	INSPECTION OF ANCHORS POST–INSTALLED IN HARDENED CONCRETE MEMBERS PER SECTION 1909.1 OF THE IBC.
•	AT THE TIME FRESH CONCRETE IS SAMPLED TO FABRICATED SPECIMENS FOR STRENGTH TEXT, PERFORM SLUMP AND AIR CONTENT TESTS, AND DETERMINE THE TEMPERATURE OF THE CONCRETE PER SECTION 1910.10 OF THE IBC.
•	INSPECTIONS OF SOILS PER TABLE 1705.6 OF THE IBC.

TABLE 1704.3
REQUIRED VERIFICATION AND INSPECTION OF STEEL CONSTRUCTION

VERIFICATION AND INSPECTION	CONTINUOUS	PERIODIC	REFERENCED STANDARD	IBC REFERENCE
1. MATERIAL VERIFICATION OF HIGH–STRENGTH BOLTS, NUTS AND WASHERS:				
a. IDENTIFICATION MARKINGS TO CONFORM TO ASTM STANDARDS SPECIFIED IN THE APPROVED CONSTRUCTION DOCUMENTS.	–	X	ACI 360, SEC. A3.3, APPLICABLE ASTM MATERIAL STANDARDS	–
b. MANUFACTURER'S CERTIFICATE OF COMPLIANCE REQUIRED.	–	X	–	–
2. INSPECTION OF HIGH–STRENGTH BOLTING:				
a. SNUG–TIGHT JOINTS	–	X	ACI 360, SEC. A3.3, APPLICABLE ASTM MATERIAL STANDARDS	1704.3.3
b. PRETENSIONED AND SLIP–CRITICAL JOINTS USING TURN–OF–NUT WITH MATCHMARKING, TWIST–OFF BOLT OR DIRECT TENSION INDICATOR METHODS OF INSTALLATION.	–	X		
c. PRETENSIONED AND SLIP–CRITICAL JOINTS USING TURN–OF–NUT WITHOUT MATCHMARKING OR CALIBRATED WRENCH METHODS OF INSTALLATION.	X	–		
3. MATERIAL VERIFICATION OF STRUCTURAL STEEL AND COLD–FORMED STEEL DECK:				
a. FOR STRUCTURAL STEEL, IDENTIFICATION MARKINGS TO CONFORM TO AISC 360.	–	X	ACI 360, SEC. M5.5	
b. FOR OTHER STEEL, IDENTIFICATION MARKINGS TO CONFORM TO ASTM STANDARDS SPECIFIED IN THE APPROVED CONSTRUCTION DOCUMENTS.	–	X	APPLICABLE ASTM MATERIAL STANDARDS	
c. MANUFACTURER'S CERTIFIED TEST REPORTS.	–	X		
4. MATERIAL VERIFICATION OF WELD FILLER MATERIALS:				
a. IDENTIFICATION MARKINGS TO CONFORM TO AWS SPECIFICATION IN THE APPROVED CONSTRUCTION DOCUMENTS.	–	X	AISC 360, SEC. A3.5 AND APPLICABLE AWS A5 DOCUMENTS	–
b. MANUFACTURER'S CERTIFICATE OF COMPLIANCE REQUIRED.	–	X	–	–
5. INSPECTION OF WELDING:				
a. STRUCTURAL STEEL AND COLD–FORMED STEEL DECK:				
1. COMPLETE AND PARTIAL JOINT PENETRATION GROOVE WELDS.	X	–	AWS D1.1	1704.3.1
2. MULTIPASS FILLET WELDS.	X	–		
3. SINGLE–PASS FILLET WELDS > 5/16".	X	–		
4. PLUG AND SLOT WELDS.	X	–		
5. SINGLE–PASS FILLET WELDS ≤ 5/16".	–	X		
6. FLOOR AND DECK WELDS.	–	X	AWS D1.3	
b. REINFORCING STEEL:				
1. VERIFICATION OF WELDABILITY OF REINFORCING STEEL OTHER THAN ASTM A 706.	–	X	AWS D1.4 ACI 318: SEC. 3.5.2	–
2. REINFORCING STEEL RESISTING FLEXURAL AND AXIAL FORCES IN INTERMEDIATE AND SPECIAL MOMENT FRAMES, AND BOUNDARY ELEMENTS OF SPECIAL STRUCTURAL WALLS OF CONCRETE AND SHEAR REINFORCEMENT.	X	–		
3. SHEAR REINFORCEMENT.	X	–		
4. OTHER REINFORCING STEEL.	–	X		
6. INSPECTION OF STEEL FRAME JOINT DETAILS FOR COMPLIANCE:				
a. DETAILS SUCH AS BRACING AND STIFFENING.	–	X	–	1704.3.2
b. MEMBER LOCATIONS.	–	X		
c. APPLICATION OF JOINT DETAILS AT EACH CONNECTION.	–	X		

TABLE 1704.7
REQUIRED VERIFICATION AND INSPECTION OF SOILS

VERIFICATION AND INSPECTION TASK	CONTINUOUS DURING TASK LISTED	PERIODIC DURING TASK LISTED
1. VERIFY MATERIALS BELOW SHALLOW FOUNDATIONS ARE ADEQUATE TO ACHEIVE THE DESIGN BEARING CAPACITY.	–	X
2. VERIFY EXCAVATIONS ARE EXTENDED TO PROPER DEPTH AND HAVE REACHED PROPER MATERIAL.	–	X
3. PERFORM CLASSIFICATION AND TESTING OF COMPACTED FILL MATERIALS.	–	X
4. VERIFY USE OF PROPER MATERIALS, DENSITIES AND LIFT THICKNESSES DURING PLACEMENT AND COMPACTION OF COMPACTED FILL.	X	–
5. PRIOR TO PLACEMENT OF COMPACTED FILL, OBSERVE SUBGRADE AND VERIFY THAT SITE HAS BEEN PREPARED PROPERLY.	–	X

TABLE 1705.3
REQUIRED VERIFICATION AND INSPECTION OF CONCRETE CONSTRUCTION

VERIFICATION AND INSPECTION	CONTINUOUS	PERIODIC	REFERENCED STANDARD	IBC REFERENCE
1. INSPECTION OF REINFORCING STEEL, INCLUDING PRE–STRESSING TENDONS, AND PLACEMENT	–	X	ACI 318: 3.5, 7.1–7.7	1910.4
2. INSPECTION OF REINFORCING STEEL WELDING ON ACCORDANCE WITH TABLE 1704.3, ITEM 5b.	–	–	AWS D1.4 ACI 318: 3.5.2	–
3. INSPECTION OF BOLTS TO BE INSTALLED IN CONCRETE PRIOR TO AND DURING PLACEMENT OF CONCRETE WHERE ALLOWABLE LOADS HAVE BEEN INCREASED WHERE STRENGTH DESIGN IS USED.	–	–	ACI 318: 8.1.3, 21.2.8	1908.5, 1909.1
4. INSPECTION OF ANCHORS INSTALLED IN HARDED CONCRETE.	–	X	ACI 318: 3.8.6, 8.1.3, 21.2.8	1909.1
5. VERIFYING USE OF REQUIRED DESIGN MIX.	–	X	ACI 318: Ch 4, 5.2–5.4	1904.2, 1910.2, 1910.3
6. AT THE TIME FRESH CONCRETE IS STAMPED TO FABRICATE SPECIMENS FOR STRENGTH TESTS, PERFORM SLUMP AND AIR CONTENT TESTS, AND DETERMINE THE TEMPERATURE OF THE CONCRETE.	X	–	ASTM C 172 ASTM C 31 ACI 318: 5.6, 5.8	1910.10
7. INSPECTION OF CONCRETE AND SHOTCRETE PLACEMENT FOR PROPER APPLICATION TECHNIQUES.	X	–	ACI 318: 5.9, 5.10	1910.6, 1910.7, 1910.8
8. INSPECTION FOR MAINTENANCE OF SPECIFIED CURING TEMPERATURE AND TECHNIQUES.	X	–	ACI 318: 5.9, 5.10	1910.9
9. INSPECTION OF PRE–STRESSED CONCRETE: a. APPLICATION OF PRE–STRESSING FORCES. b. GROUTING OF BONDED PRE–STRESSING TENDONS IN THE SEISMIC–FORCE RESISTING SYSTEM.	– –	– –	ACI 318: 18.20 ACI 318: 18.18.4	–
10. ERECTION OF PRECAST CONCRETE MEMBERS.	–	–	ACI 318: Ch. 16	–
11. VERIFICATION OF IN–SITU CONCRETE STRENGTH, PRIOR TO STRESSING OF TENDONS IN POST–TENSIONED CONCRETE AND PRIOR TO REMOVAL OF SHORES AND FORMS FROM BEAMS AND STRUCTURAL SLAB.	–	X	ACI 318: 6.2	–
12. INSPECT FRAMEWORK FOR SHAPE, LOCATION AND DIMENSIONS OF THE CONCRETE MEMBER BEING FORMED.	–	X	ACI 318: 6.1.1	–

TABLE 1705.6
REQUIRED VERIFICATION AND INSPECTION OF CONCRETE CONSTRUCTION

VERIFICATION AND INSPECTION	CONTINUOUS DURING TASK LISTED	PERIODICALLY DURING TASK LISTED
1. VERIFY MATERIALS BELOW SHALLOW FOUNDATIONS ARE ADEQUATE TO ACHIEVE THE DESIGN BEARING CAPACITY.	–	X
2. VERIFY EXCAVATIONS ARE EXTENDED TO PROPER DEPTH AND HAVE REACHED PROPER MATERIAL.	–	X
3. PERFORM CLASSIFICATION AND TESTING OF COMPACTED FILL MATERIALS.	–	X
4. VERIFY USE OF PROPER MATERIALS, DENSITIES AND LIFT THICKNESS DURING PLACEMENT AND COMPACTION OF COMPACTED FILL.	X	–
5. PRIOR TO PLACEMENT OF COMPACTED FILL, OBSERVE SUBGRADE AND VERIFY THAT SITE HAS BEEN PREPARED PROPERLY.	–	X

SPECIAL INSTRUCTIONS

AT&T MOBILITY

7900 XERXES AVE S
3RD FLOOR
BLOOMINGTON MN 55431

BLACK & VEATCH

BLACK & VEATCH CORPORATION
7760 FRANCE AVENUE SOUTH
SUITE 1200
BLOOMINGTON, MN 55435

PROJECT NO:	129041.4117
DRAWN BY:	JKR
CHECKED BY:	JAT

REV	DATE	DESCRIPTION
1	06/08/20	ISSUED FOR CONSTRUCTION
0	04/20/20	ISSUED FOR CONSTRUCTION

LICENSED PROFESSIONAL ENGINEER
ROBLEY A. EVANS
20209
IOWA
06/10/2020

IT IS A VIOLATION OF LAW FOR ANY PERSON, UNLESS THEY ARE ACTING UNDER THE DIRECTION OF A LICENSED PROFESSIONAL ENGINEER, TO ALTER THIS DOCUMENT.

VANDALIA & 72ND
IAL02116
6970 SE VANDALIA DR.
PLEASANT HILL, IA 50327
NSB–WIC

SHEET TITLE

SPECIAL INSPECTIONS

SHEET NUMBER

C-8

PART 1 – GENERAL

1.1 SCOPE:

A. FORM WORK, REINFORCING STEEL, ACCESSORIES, CAST–IN PLACE CONCRETE, FINISHING, CURING AND TESTING FOR STRUCTURAL CONCRETE FOUNDATIONS.

1.2 REFERENCES:

A. ACI (AMERICAN CONCRETE INSTITUTE)

1. ACI 301 SPECIFICATION FOR STRUCTURAL CONCRETE FOR BUILDINGS.
2. ACI 304 RECOMMENDED PRACTICE FOR MEASURING, MIXING, TRANSPORTING AND PLACING CONCRETE.
3. ACI 305 RECOMMENDED PRACTICE FOR HOT WEATHER CONCRETING.
4. ACI 306 RECOMMENDED PRACTICE FOR COLD WEATHER CONCRETING.
5. ACI 308 STANDARD PRACTICE FOR CURING CONCRETING.
6. ACI 309 STANDARD PRACTICE FOR CONSOLIDATION OF CONCRETE.
7. ACI 318 BUILDING CODE REQUIREMENTS FOR REINFORCED CONCRETE.
8. ACI 347 RECOMMENDED PRACTICE FOR CONCRETE FORMWORK DRILL PIERS.

B. ASTM (AMERICAN SOCIETY FOR TESTING AND MATERIALS). THE APPLICABLE STANDARDS OF THE AMERICAN SOCIETY FOR TESTING AND MATERIALS ARE LISTED IN THE ACI STANDARDS AND ARE A PART OF THIS SPECIFICATION.

PART 2 – PRODUCTS

2.1 REINFORCING MATERIALS:

A. REINFORCING BARS: ASTM A615, GRADE 60, PROPOSED DEFORMED BILLET–STEEL BARS, PLAIN FINISH.

B. FURNISH CHAIRS, BOLSTERS, BAR SUPPORTS, SPACERS AS REQUIRED FOR SUPPORT OF REINFORCING STEEL AND WIRE FABRIC.

2.2 CONCRETE MATERIALS:

A. PORTLAND CEMENT SHALL BE TYPE II, CONFORMING TO ASTM C–150.

B. AGGREGATE SHALL CONFORM TO ASTM C–33.

1. FINE AGGREGATE SHALL BE UNIFORMLY GRADED, CLEAN SHARP, WASHED NATURAL, OR CRUSHED SAND, FREE FROM ORGANIC IMPURITIES.
2. COARSE AGGREGATE SHALL BE NATURAL WASHED GRAVEL OR WASHED CRUSHED ROCK HAVING HARD, STRONG, DURABLE PIECES, FREE FROM ADHERENT COATINGS.
3. MAXIMUM SIZE OF COARSE AGGREGATE SHALL BE 3/4 INCH IN ACCORDANCE WITH THE REQUIREMENTS OF ASTM C–33 GRADATION SIZE NO. 67.

C. WATER USED IN CONCRETE MIX SHALL BE POTABLE, CLEAN, AND FREE FROM OILS, ACIDS, SALTS, CHLORIDES, ALKALI, SUGAR, VEGETABLE, OR OTHER INJURIOUS SUBSTANCES.

D. THE CONCRETE SHALL CONTAIN AN AIR–ENTRAINING ADMIXTURE COMPLYING WITH THE REQUIREMENTS OF ASTM C–260 AND ACI 212. 1R AND A WATER– REDUCING ADMIXTURE COMPLYING WITH THE REQUIREMENTS OF ASTM C–494 AND ACI 212. 1R. ADMIXTURES SHALL BE PURCHASED AND BATCHED IN LIQUID SOLUTION. THE USE OF CALCIUM CHLORIDE OR AN ADMIXTURE CONTAINING CALCIUM CHLORIDE IS PROHIBITED. ADMIXTURES SHALL BE OF THE SAME MANUFACTURER TO ASSURE COMPATIBILITY. ACCEPTABLE MANUFACTURERS ARE:

1. W.R. GRACE
2. SIKA CORP.
3. MASTER BUILDERS
4. EUCLID CHEMICAL CO.
5. APPROVED EQUAL

E. CURING COMPOUND SHALL CONFORM TO ASTM C309, TYPE I, ID, CLASS A AND B AND ASTM C171 AS APPLICABLE.

2.3 CONCRETE MIX:

A. PROPORTION CONCRETE MIX IN ACCORDANCE WITH REQUIREMENTS OF ACI 301. THE STRENGTH OF CONCRETE SHALL BE AS INDICATED ON THE DRAWINGS. WHERE STRENGTH IS NOT CLEARLY INDICATED, CONCRETE SHALL HAVE A MINIMUM 28 DAY COMPRESSIVE STRENGTH OF 4000 PSI.

B. THE CONCRETE MIX SHALL BE DESIGNED FOR A MAXIMUM SLUMP OF THREE INCHES (PLUS OR MINUS 1–INCH) AT THE POINT OF DISCHARGE. MIXES OF THE STIFFEST CONSISTENCY THAT CAN BE EFFICIENTLY PLACED SHALL BE USED.

C. ALL CONCRETE SHALL BE TO SIX PERCENT (6%) AIR ENTRAINED (PLUS OR MINUS 1%).

D. ALL STRUCTURAL CONCRETE SHALL CONTAIN A WATER–REDUCING AGENT.

PART 3 – EXECUTION

3.1 GENERAL:

A. CONSTRUCT AND ERECT THE FORM WORK IN ACCORDANCE WITH ACI 301 AND ACI 347.

B. COLD–WEATHER CONCRETING SHALL BE IN ACCORDANCE WITH ACI 306.

C. HOT–WEATHER CONCRETING SHALL BE IN ACCORDANCE WITH ACI 305.

3.2 INSERTS, EMBEDDED COMPONENTS AND OPENINGS:

A. CONTRACTOR SHALL CHECK ALL CIVIL, ARCHITECTURAL, STRUCTURAL AND ELECTRICAL DRAWINGS FOR OPENINGS, SLEEVES, ANCHOR BOLTS, INSERTS AND OTHER ITEMS TO BE BUILT INTO THE CONCRETE WORK.

B. COORDINATE THE WORK OF OTHER SECTION IN FORMING AND SETTING OPENINGS. RECESSES, SLOTS, CHASES, ANCHORS, INSERTS AND OTHER ITEMS TO BE EMBEDDED.

C. EMBEDDED ITEMS SHALL BE SET ACCURATELY IN LOCATION, ALIGNMENT, ELEVATION AND PLUMBNESS, LOCATE AND MEASURE FROM ESTABLISHED SURVEYED REFERENCE BENCHMARKS.

D. EMBEDDED ITEMS SHALL BE ANCHORED INTO PLACE IN A MANNER TO PREVENT MOVEMENT DURING CONCRETE PLACEMENT AND CONSOLIDATION. COMPONENTS FORMING A PART OF A COMPLETE ASSEMBLY SHALL BE ALIGNED BEFORE ANCHORING INTO PLACE. PROVIDE TEMPORARY BRACING, ANCHORAGE, AND TEMPLATES AS REQUIRED TO MAINTAIN THE SETTING AND ALIGNMENT.

3.3 REINFORCEMENT PLACEMENT:

A. PLACE REINFORCEMENT ACCORDING TO CHECKED AND RELEASED DRAWINGS AND IN ACCORDANCE WITH ACI 301 AND ACI 318.

B. ACCURATELY POSITION, SUPPORT AND SECURE REINFORCEMENT AGAINST DISPLACEMENT FROM FORM WORK CONSTRUCTION OR CONCRETE PLACEMENT AND CONSOLIDATION. SUPPORT REINFORCING ON METAL CHAIRS, RUNNERS, BOLSTERS, SPACERS AND HANGERS.

C. SPLICES OF REINFORCING BARS SHALL BE CLASS B UNLESS SHOWN OTHERWISE ON THE DRAWINGS. SPLICES SHALL BE STAGGERED. FULL DEVELOPMENT LENGTH SHALL BE PROVIDED ACROSS JOINTS.

D. LOCATE REINFORCING TO PROVIDE CONCRETE COVER AND SPACING SHOWN ON THE DRAWINGS. MINIMUM COVER SHALL BE AS REQUIRED BY ACI 318.

E. WELDING OF AND TO ANY REINFORCING MATERIALS INCLUDING TACK WELDING OF CROSSING BARS IS STRICTLY PROHIBITED.

3.4 CONCRETE PLACEMENT:

A. PRIOR TO PLACING CONCRETE, THE FORMS AND REINFORCEMENT SHALL BE THOROUGHLY INSPECTED; ALL TEMPORARY BRACING, TIES AND CLEATS REMOVED; ALL OPENINGS FOR UTILITIES PROPERLY BOXED; ALL FORMS PROPERLY SECURED IN THERE CORRECT POSITION AND MADE TIGHT. ALL REINFORCEMENT AND EMBEDDED ITEMS SHALL BE SECURED IN THEIR PROPER LOCATIONS. ALL OLD AND DRY CONCRETE AND DIRT SHALL BE CLEANED OFF AND ALL STANDING WATER AND OTHER FOREIGN MATERIAL REMOVED.

B. PLACING CONCRETE SHALL BE IN ACCORDANCE WITH ACI 301 AND ACI 304 AND SHALL BE CARRIED OUT AT SUCH A RATE THAT THE CONCRETE PREVIOUSLY PLACED IS STILL PLASTIC AND INTEGRATED WITH THE FRESHLY PLACED CONCRETE. CONCRETING ONCE STARTED, SHALL BE CARRIED ON AS A CONTINUOUS OPERATION UNTIL THE SECTION IS COMPLETED. NO COLD JOINTS SHALL BE ALLOWED.

C. ALL CONCRETE SHALL BE THOROUGHLY CONSOLIDATED AND COMPACTED BY VIBRATION SPACING, RODDING, OR FORKING DURING THE OPERATION OF PLACING AND DEPOSITING IN ACCORDANCE WITH ACI 309. THE CONCRETE SHALL BE THOROUGHLY WORKED AROUND REINFORCEMENT, EMBEDDED ITEMS, AND INTO THE CORNER OF THE FORMS SO AS TO ELIMINATE ALL AIR AND STONE POCKETS.

3.5 FINISHING:

A. FINISHING OF THE FLOOR SLABS SHALL BE IN ACCORDANCE WITH ACI 302.1 SECTION 7.2 WITH A MINIMUM OF THREE TROWELINGS. THE SLAB FINISH TOLERANCE AS MEASURED IN ACCORDANCE WITH ASTM E 1155 SHALL HAVE AN OVERALL TEST NUMBER FOR FLATNESS, FF= 20 AND FOR LEVEL, FL=15. THE MINIMUM LOCAL NUMBER FOR FLATNESS, FF= 15 AND FOR LEVEL, FL=10.

B. SURFACE OF FLOOR SLAB SHALL RECEIVE TWO COATS OF CLEAR SEALER/HARDENER.

C. ABOVE GRADE WALL SURFACES SHALL HAVE A SMOOTH FORM FINISH AS DEFINED IN CHAPTER 10 OF ACI 301.

3.6 CURING:

A. FRESHLY DEPOSITED CONCRETE SHALL BE PROTECTED FROM PREMATURE DRYING AND EXCESSIVELY HOT AND COLD TEMPERATURES AND SHALL BE MAINTAINED WITH MINIMUM MOISTURE LOSS AT A RELATIVELY CONSTANT TEMPERATURE FOR A PERIOD OF TIME NECESSARY FOR THE HYDRATION OF THE CEMENT AND PROPER HARDENING OF THE CONCRETE.

B. CONCRETE SHALL BE KEPT CONTINUOUSLY MOIST AT LEAST OVERNIGHT, IMMEDIATELY FOLLOWING THE INITIAL CURING. BEFORE THE CONCRETE HAS DRIED, ADDITIONAL CURING SHALL BE ACCOMPLISHED BY ONE OF THE FOLLOWING MATERIALS OR METHODS:

1. PONDING OR CONTINUOUS SPRINKLING.
2. ABSORPTIVE MAT OR FABRIC KEPT CONTINUOUSLY WET.
3. NON–ABSORPTIVE FILM (POLYETHYLENE) OVER PREVIOUSLY SPRINKLED SURFACE.
4. SAND OR OTHER COVERING KEPT CONTINUOUSLY WET.
5. CONTINUOUS STEAM (NOT EXCEEDING 150° F) OR VAPOR MIST BATH.
6. SPRAYED–ON CURING COMPOUND APPLIED IN TWO COATS, SPRAYED IN PERPENDICULAR DIRECTION.

C. THE FINAL CURING SHALL CONTINUE UNTIL THE CUMULATIVE NUMBER OF DAYS OR FRACTION THEREOF, NOT NECESSARILY CONSECUTIVE, DURING WHICH TEMPERATURE OF THE AIR IN CONTACT WITH CONCRETE IS ABOVE 50° F HAS TOTALED SEVEN (7) DAYS. CONCRETE SHALL NOT BE PERMITTED TO FREEZE DURING THE CURING PERIOD. RAPID DRYING AT THE END OF THE CURING PERIOD SHALL BE PREVENTED.

AT&T MOBILITY

7900 XERXES AVE S
3RD FLOOR
BLOOMINGTON MN 55431

BLACK & VEATCH

BLACK & VEATCH CORPORATION
7760 FRANCE AVENUE SOUTH
SUITE 1200
BLOOMINGTON, MN 55435

PROJECT NO:	129041.4117
DRAWN BY:	JKR
CHECKED BY:	JAT

REV	DATE	DESCRIPTION
1	06/08/20	ISSUED FOR CONSTRUCTION
0	04/20/20	ISSUED FOR CONSTRUCTION

LICENSED PROFESSIONAL ENGINEER
ROBLEY A. EVANS
20209
IOWA
06/10/2020

IT IS A VIOLATION OF LAW FOR ANY PERSON, UNLESS THEY ARE ACTING UNDER THE DIRECTION OF A LICENSED PROFESSIONAL ENGINEER, TO ALTER THIS DOCUMENT.

VANDALIA & 72ND
IAL02116
6970 SE VANDALIA DR.
PLEASANT HILL, IA 50327
NSB–WIC

SHEET TITLE

CONCRETE WORK NOTES

SHEET NUMBER

C-9

PART 1 – GENERAL

CLEARING, GRUBBING, STRIPPING, EROSION CONTROL, SURVEY, LAYOUT, SUBGRADE PREPARATION AND FINISH GRADING AS REQUIRED TO COMPLETE THE PROPOSED WORK SHOWN IN THESE PLANS.

1.1 REFERENCES:

A. DOT (STATE DEPARTMENT OF TRANSPORTATION STANDARD SPECIFICATIONS FOR HIGHWAY CONSTRUCTION–CURRENT EDITION).

B. ASTM (AMERICAN SOCIETY FOR TESTING AND MATERIALS).

C. OSHA (OCCUPATION SAFETY AND HEALTH ADMINISTRATION).

1.2 INSPECTION AND TESTING:

A. FIELD TESTING OF EARTHWORK COMPACTION AND CONCRETE CYLINDERS SHALL BE PERFORMED BY CONTRACTORS INDEPENDENT TESTING LAB. THIS WORK TO BE COORDINATED BY THE CONTRACTOR.

B. ALL WORK SHALL BE INSPECTED AND RELEASED BY THE GENERAL CONTRACTOR WHO SHALL CARRY OUT THE GENERAL INSPECTION OF THE WORK WITH SPECIFIC CONCERN TO PROPER PERFORMANCE OF THE WORK AS SPECIFIED AND/OR CALLED FOR ON THE DRAWINGS. IT IS THE CONTRACTOR'S RESPONSIBILITY TO REQUEST TIMELY INSPECTIONS PRIOR TO PROCEEDING WITH FURTHER WORK THAT WOULD MAKE PARTS OF WORK INACCESSIBLE OR DIFFICULT TO INSPECT.

1.3 SITE MAINTENANCE AND PROTECTION:

A. PROVIDE ALL NECESSARY JOB SITE MAINTENANCE FROM COMMENCEMENT OF WORK UNTIL COMPLETION OF THE SUBCONTRACT.

B. AVOID DAMAGE TO THE SITE AND TO EXISTING FACILITIES, STRUCTURES, TREES, AND SHRUBS DESIGNATED TO REMAIN. TAKE PROTECTIVE MEASURES TO PREVENT EXISTING FACILITIES THAT ARE NOT DESIGNATED FOR REMOVAL FROM BEING DAMAGED BY THE WORK.

C. KEEP SITE FREE OF ALL PONDING WATER.

D. PROVIDE EROSION CONTROL MEASURES IN ACCORDANCE WITH STATE DOT AND EPA REQUIREMENTS.

E. PROVIDE AND MAINTAIN ALL TEMPORARY FENCING, BARRICADES, WARNING SIGNALS AND SIMILAR DEVICES NECESSARY TO PROTECT AGAINST THEFT FROM PROPERTY DURING THE ENTIRE PERIOD OF CONSTRUCTION. REMOVE ALL SUCH DEVICES UPON COMPLETION OF THE WORK.

F. EXISTING UTILITIES: DO NOT INTERRUPT EXISTING UTILITIES SERVING FACILITIES OCCUPIED BY THE OWNER OR OTHERS, EXCEPT WHEN PERMITTED IN WRITING BY THE ENGINEER AND THEN ONLY AFTER ACCEPTABLE TEMPORARY UTILITY SERVICES HAVE BEEN PROVIDED.

1. PROVIDE A MINIMUM 48–HOUR NOTICE TO THE ENGINEER AND RECEIVE WRITTEN NOTICE TO PROCEED BEFORE INTERRUPTING ANY UTILITY SERVICE.

PART 2 – PRODUCTS

2.1 SUITABLE BACKFILL: ASTM D2321 (CLASS I, II, III OR IV) FREE FROM FROZEN LUMPS, REFUSE, STONES OR ROCKS LARGER THAN 3 INCHES IN ANY DIMENSION OR OTHER MATERIAL THAT MAY MAKE THE INORGANIC MATERIAL UNSUITABLE FOR BACKFILL.

2.2 NON–POROUS GRANULAR EMBANKMENT AND BACKFILL: ASTM D2321 (CLASS III, IVA OR IVB) COARSE AGGREGATE. FREE FROM FROZEN LUMPS, REFUSE, STONES OR ROCKS LARGER THAN 3 INCHES IN ANY DIMENSION OR OTHER MATERIAL THAT MAY MAKE THE INORGANIC MATERIAL UNSUITABLE FOR BACKFILL.

2.3 POROUS GRANULAR EMBANKMENT AND BACKFILL: ASTM D2321 (CLASS IA, IB OR II) COARSE AGGREGATE FREE FROM FROZEN LUMPS, REFUSE, STONES OR ROCKS LARGER THAN 3 INCHES IN ANY DIMENSION OR OTHER MATERIAL THAT MAY MAKE THE INORGANIC MATERIAL UNSUITABLE FOR BACKFILL.

2.4 SELECT STRUCTURAL FILL: GRANULAR FILL MATERIAL MEETING THE REQUIREMENTS OF ASTM E850–95. FOR USE AROUND AND UNDER STRUCTURES WHERE STRUCTURAL FILL MATERIAL ARE REQUIRED.

2.5 GRANULAR BEDDING AND TRENCH BACKFILL: WELL–GRADED SAND MEETING THE GRADATION REQUIREMENTS OF ASTM D2487 (SE OR SW–SM).

2.6 COARSE AGGREGATE FOR ACCESS ROAD SUBBASE COURSE SHALL CONFORM TO ASTM D2940.

2.7 UNSUITABLE MATERIAL: HIGH AND MODERATELY PLASTIC SILTS AND CLAYS (LL>45). MATERIAL CONTAINING REFUSE, FROZEN LUMPS, DEMOLISHED BITUMINOUS MATERIAL, VEGETATIVE MATTER, WOOD, STONES IN EXCESS OF 3 INCHES IN ANY DIMENSION, AND DEBRIS AS DETERMINED BY THE CONSTRUCTION MANAGER. TYPICALLY THESE WILL BE SOILS CLASSIFIED BY ASTM AS: PT, MH, CH, OH, ML, AND OL.

2.8 GEOTEXTILE FABRIC: MIRAFI 500X OR ENGINEER APPROVED EQUAL.

2.9 PLASTIC MARKING TAPE: SHALL BE ACID AND ALKALI RESISTANT POLYETHYLENE FILM SPECIFICALLY MANUFACTURED FOR MARKING AND LOCATING UNDERGROUND UTILITIES, 6 INCHES WIDE WITH A MINIMUM THICKNESS OF 0.004 INCH. TAPE SHALL HAVE MINIMUM STRENGTH OF 1500 PSI IN BOTH DIRECTIONS AND MANUFACTURED WITH INTEGRAL CONDUCTORS, FOIL BACKING OR OTHER MEANS TO ENABLE DETECTION BY A METAL DETECTOR WHEN BURIED UP TO 3 FEET DEEP. THE METALLIC CORE OF THE TAPE SHALL BE ENCASED IN A PROTECTIVE JACKET OR PROVIDED WITH OTHER MEANS TO PROTECT IT FROM CORROSION. TAPE COLOR SHALL BE RED FOR ELECTRIC UTILITIES AND ORANGE FOR TELECOMMUNICATION UTILITIES.

PART 3 – EXECUTION

3.1 GENERAL:

A. BEFORE STARTING GENERAL SITE PREPARATION ACTIVITIES, INSTALL EROSION AND SEDIMENT CONTROL MEASURES. THE WORK AREA SHALL BE CONSTRUCTED AND MAINTAINED IN SUCH CONDITION THAT IN THE EVENT OF RAIN THE SITE WILL BE DRAINED AT ANY TIME.

B. BEFORE ALL SURVEY, LAYOUT, STAKING, AND MARKING, ESTABLISH AND MAINTAIN ALL LINES, GRADES, ELEVATIONS AND BENCHMARKS NEEDED FOR EXECUTION OF THE WORK.

C. CLEAR AND GRUB THE AREA WITHIN THE LIMITS OF THE SITE. REMOVE TREES, BRUSH, STUMPS, RUBBISH AND OTHER DEBRIS AND VEGETATION RESTING ON OR PROTRUDING THROUGH THE SURFACE OF THE SITE AREA TO BE CLEARED.

1. REMOVE THE FOLLOWING MATERIALS TO A DEPTH OF NO LESS THAN 12 INCHES BELOW THE ORIGINAL GROUND SURFACE: ROOTS, STUMPS, AND OTHER DEBRIS, BRUSH, AND REFUSE EMBEDDED IN OR PROTRUDING THROUGH THE GROUND SURFACE, RAKE, DISK OR PLOW THE AREA TO A DEPTH OF NO LESS THAN 6 INCHES, AND REMOVE TO A DEPTH OF 12 INCHES ALL ROOTS AND OTHER DEBRIS THEREBY EXPOSED.

2. REMOVE TOPSOIL MATERIAL COMPLETELY FROM THE SURFACE UNTIL THE SOIL NO LONGER MEETS THE DEFINITION OF TOPSOIL. AVOID MIXING TOPSOIL WITH SUBSOIL OR OTHER UNDESIRABLE MATERIALS.

3. EXCEPT WHERE EXCAVATION TO GREATER DEPTH IS INDICATED, FILL DEPRESSIONS RESULTING FROM CLEARING, GRUBBING AND DEMOLITION WORK COMPLETELY WITH SUITABLE FILL.

A. REMOVE FROM THE SITE AND DISPOSE IN AN AUTHORIZED LANDFILL ALL DEBRIS RESULTING FROM CLEARING AND GRUBBING OPERATIONS. BURNING WILL NOT BE PERMITTED.

B. PRIOR TO EXCAVATING, THOROUGHLY EXAMINE THE AREA TO BE EXCAVATED AND/OR TRENCHED TO VERIFY THE LOCATIONS OF FEATURES INDICATED ON THE DRAWINGS AND TO ASCERTAIN THE EXISTENCE AND LOCATION OF ANY STRUCTURE, UNDERGROUND STRUCTURE, OR OTHER ITEM NOT SHOWN THAT MIGHT INTERFERE WITH THE PROPOSED CONSTRUCTION. NOTIFY THE CONSTRUCTION MANAGER OF ANY OBSTRUCTIONS THAT WILL PREVENT ACCOMPLISHMENT OF THE WORK AS INDICATED ON THE DRAWINGS.

C. SEPARATE AND STOCK PILE ALL EXCAVATED MATERIALS SUITABLE FOR BACKFILL. ALL EXCESS EXCAVATED AND UNSUITABLE MATERIALS SHALL BE DISPOSED OF OFF–SITE IN A LEGAL MANNER.

3.2 BACKFILL:

A. AS SOON AS PRACTICAL, AFTER COMPLETING CONSTRUCTION OF THE RELATED STRUCTURE, INCLUDING EXPIRATION OF THE SPECIFIED MINIMUM CURING PERIOD FOR CAST–IN–PLACE CONCRETE, BACKFILL THE EXCAVATION WITH APPROVED MATERIAL TO RESTORE THE REQUIRED FINISHED GRADE.

1. PRIOR TO PLACING BACKFILL AROUND STRUCTURES, ALL FORMS SHALL BE REMOVED AND THE EXCAVATION CLEANED OF ALL TRASH, DEBRIS, AND UNSUITABLE MATERIALS.

2. BACKFILL BY PLACING AND COMPACTING SUITABLE BACKFILL MATERIAL OR SELECT GRANULAR BACKFILL MATERIAL WHEN REQUIRED IN UNIFORM HORIZONTAL LAYERS OF NO GREATER THAN 8–INCHES LOOSE THICKNESS AND COMPACTED. WHERE HAND OPERATED COMPACTORS ARE USED, THE FILL MATERIAL SHALL BE PLACED IN LIFTS NOT TO EXCEED 4 INCHES IN LOOSE DEPTH AND COMPACTED.

3. WHENEVER THE DENSITY TESTING INDICATES THAT THE CONTRACTOR HAS NOT OBTAINED THE SPECIFIED DENSITY, THE SUCCEEDING LAYER SHALL NOT BE PLACED UNTIL THE SPECIFICATION REQUIREMENTS ARE MET UNLESS OTHERWISE AUTHORIZED BY THE GEOTECHNICAL ENGINEER. THE CONTRACTOR SHALL TAKE WHATEVER APPROPRIATE ACTION IS NECESSARY, SUCH AS DISKING AND DRYING, ADDING WATER, OR INCREASING THE COMPACTIVE EFFORT TO MEET THE MINIMUM COMPACTION REQUIREMENTS.

B. THOROUGHLY COMPACT EACH LAYER OF BACKFILL TO A MINIMUM OF 95 PERCENT OF THE MAXIMUM DRY DENSITY AS PROVIDED BY THE STANDARD PROCTOR TEST, ASTM D 698.

3.3 TRENCH EXCAVATION:

A. UTILITY TRENCHES SHALL BE EXCAVATED TO THE LINES AND GRADES SHOWN ON THE DRAWINGS OR AS DIRECTED BY THE GENERAL CONTRACTOR. PROVIDE SHORING, SHEETING AND BRACING AS REQUIRED TO PREVENT CAVING OR SLOUGHING OF THE TRENCH WALLS.

B. EXTEND THE TRENCH WIDTH A MINIMUM OF 6 INCHES BEYOND THE OUTSIDE EDGE OF THE OUTERMOST CONDUIT.

C. WHEN SOFT YIELDING, OR OTHERWISE UNSTABLE SOIL CONDITIONS ARE ENCOUNTERED, BACKFILL AT THE REQUIRED TRENCH TO A DEPTH OF NO LESS THAN 12 INCHES BELOW THE REQUIRED ELEVATION AND BACKFILL WITH GRANULAR BEDDING MATERIAL.

3.4 TRENCH BACKFILL:

A. PROVIDE GRANULAR BEDDING MATERIAL IN ACCORDANCE WITH THE DRAWINGS AND THE UTILITY REQUIREMENTS.

B. NOTIFY THE GENERAL CONTRACTOR 24 HOURS IN ADVANCE OF BACKFILLING.

C. CONDUCT UTILITY CHECK TESTS BEFORE BACKFILLING. BACKFILL AND COMPACT TRENCH BEFORE ACCEPTANCE TESTING.

D. PLACE GRANULAR TRENCH BACKFILL UNIFORMLY ON BOTH SIDES OF THE CONDUITS IN 6–INCH UNCOMPACTED LIFTS UNTIL 12 INCHES OVER THE CONDUITS. SOLIDLY RAM AND TAMP BACKFILL INTO SPACE AROUND CONDUITS.

E. PROTECT CONDUIT FROM LATERAL MOVEMENT, IMPACT DAMAGE, OR UNBALANCED LOADING.

F. ABOVE THE CONDUIT EMBEDMENT ZONE, PLACE AND COMPACT SATISFACTORY BACKFILL MATERIAL IN 8–INCH MAXIMUM LOOSE THICKNESS LIFTS TO RESTORE THE REQUIRED FINISHED SURFACE GRADE.

G. COMPACT FINAL TRENCH BACKFILL TO A DENSITY EQUAL TO OR GREATER THAN THAT OF THE EXISTING UNDISTURBED MATERIAL IMMEDIATELY ADJACENT TO THE TRENCH BUT NO LESS THAN A MINIMUM OF 95 PERCENT OF THE MAXIMUM DRY DENSITY AS PROVIDED BY THE STANDARD PROCTOR TEST, ASTM D 698.

3.5 AGGREGATE ACCESS ROAD:

A. CLEAR, GRUB, STRIP AND EXCAVATE FOR THE ACCESS ROAD TO THE LINES AND GRADES INDICATED ON THE DRAWINGS. SCARIFY TO A DEPTH OF 6 INCHES AND PROOF–ROLL. ALL HOLES, RUTS, SOFT PLACES AND OTHER DEFECTS SHALL BE CORRECTED.

B. THE ENTIRE SUBGRADE SHALL BE COMPACTED TO NOT LESS THAN 95 PERCENT OF THE MAXIMUM DRY DENSITY AS PROVIDED BY THE MODIFIED PROCTOR TEST, ASTM D 1557.

C. AFTER PREPARATION OF THE SUBGRADE IS COMPLETE THE GEOTEXTILE FABRIC (MIRAFI 500Xi) SHALL BE INSTALLED TO THE LIMITS INDICATED ON THE DRAWINGS BY ROLLING THE FABRIC OUT LONGITUDINALLY ALONG THE ROADWAY. THE FABRIC SHALL NOT BE DRAGGED ACROSS THE SUBGRADE. PLACE THE ENTIRE ROLL IN A SINGLE OPERATION, ROLLING OUT AS SMOOTHLY AS POSSIBLE.

1. OVERLAPS PARALLEL TO THE ROADWAY WILL BE PERMITTED AT THE CENTERLINE AND AT LOCATIONS BEYOND THE ROADWAY SURFACE WIDTH (I.E. WITHIN THE SHOULDER WIDTH) ONLY. NO LONGITUDINAL OVERLAPS SHALL BE LOCATED BETWEEN THE CENTERLINE AND THE SHOULDER. PARALLEL OVERLAPS SHALL BE A MINIMUM OF 3 FEET WIDE.

2. TRANSVERSE (PERPENDICULAR TO THE ROADWAY) OVERLAPS AT THE END OF A ROLL SHALL OVERLAP IN THE DIRECTION OF THE AGGREGATE PLACEMENT (PREVIOUS ROLL ON TOP) AND SHALL HAVE A MINIMUM LENGTH OF 3 FEET.

3. ALL OVERLAPS SHALL BE PINNED WITH STAPLES OR NAILS A MINIMUM OF 10 INCHES LONG TO INSURE POSITIONING DURING PLACEMENT OF AGGREGATE. PIN LONGITUDINAL SEAMS AT 25 FOOT CENTERS AND TRANSVERSE SEAMS EVERY 5 FEET.

D. THE AGGREGATE BASE AND SURFACE COURSES SHALL BE CONSTRUCTED IN LAYERS NOT MORE THAN 4 INCH (COMPACTED) THICKNESS. AGGREGATE TO BE PLACED ON GEOTEXTILE FABRIC SHALL BE END–DUMPED ON THE FABRIC FROM THE FREE END OF THE FABRIC OR OVER PREVIOUSLY PLACED AGGREGATE. THE FIRST LIFT SHALL BE BLADED DOWN TO A THICKNESS OF 8 INCHES PRIOR TO COMPACTION. AT NO TIME SHALL EQUIPMENT, EITHER TRANSPORTING THE AGGREGATE OR GRADING THE AGGREGATE, BE PERMITTED ON THE ROADWAY WITH LESS THAN 4 INCHES OF MATERIAL COVERING THE FABRIC.

E. THE AGGREGATE SHALL BE IMMEDIATELY COMPACTED TO NOT LESS THAN 95 PERCENT OF THE MAXIMUM DRY DENSITY AS PROVIDED BY THE MODIFIED PROCTOR TEST, ASTM D 1557 WITH A TAMPING ROLLER, OR WITH A PNEUMATIC–TIRED ROLLER, OR WITH A VIBRATORY MACHINE OR ANY COMBINATION OF THE ABOVE. THE TOP LAYER SHALL BE GIVEN A FINAL ROLLING WITH A THREE–WHEEL OR TANDEM ROLLER.

3.6 FINISH GRADING:

A. PERFORM ALL GRADING TO PROVIDE POSITIVE DRAINAGE AWAY FROM STRUCTURES AND SMOOTH, EVEN SURFACE DRAINAGE OF THE ENTIRE AREA WITHIN THE LIMITS OF CONSTRUCTION. GRADING SHALL BE COMPATIBLE WITH ALL SURROUNDING TOPOGRAPHY AND STRUCTURES.

B. UTILIZE SATISFACTORY FILL MATERIAL RESULTING FROM THE EXCAVATION WORK IN THE CONSTRUCTION OF FILLS, EMBANKMENTS AND FOR REPLACEMENT OF REMOVED UNSUITABLE MATERIALS.

C. ACHIEVE FINISHED GRADE BY PLACING A MINIMUM OF 4 INCHES OF 1/2" – 3/4" CRUSHED STONE ON TOP SOIL STABILIZER FABRIC.

D. REPAIR ALL ACCESS ROADS AND SURROUNDING AREAS USED DURING THE COURSE OF THIS WORK TO THEIR ORIGINAL CONDITION.

3.7 ASPHALT PAVING ROAD:

IOWA:

A. IOWA DOT CHAPTER 8 – HOT MIX ASPHALT (HMA) PAVEMENT, BASES, AND SUBBASES.

AT&T MOBILITY

7900 XERXES AVE S
3RD FLOOR
BLOOMINGTON MN 55431

BLACK & VEATCH

BLACK & VEATCH CORPORATION
7760 FRANCE AVENUE SOUTH
SUITE 1200
BLOOMINGTON, MN 55435

PROJECT NO:	129041.4117
DRAWN BY:	JKR
CHECKED BY:	JAT

REV	DATE	DESCRIPTION
1	06/08/20	ISSUED FOR CONSTRUCTION
0	04/20/20	ISSUED FOR CONSTRUCTION

LICENSED PROFESSIONAL ENGINEER
ROBLEY A. EVANS
20209
06/10/2020
IOWA

IT IS A VIOLATION OF LAW FOR ANY PERSON, UNLESS THEY ARE ACTING UNDER THE DIRECTION OF A LICENSED PROFESSIONAL ENGINEER, TO ALTER THIS DOCUMENT.

VANDALIA & 72ND
IAL02116
6970 SE VANDALIA DR.
PLEASANT HILL, IA 50327
NSB–WIC

SHEET TITLE
SITE WORK AND DRAINAGE NOTES

SHEET NUMBER
C-10

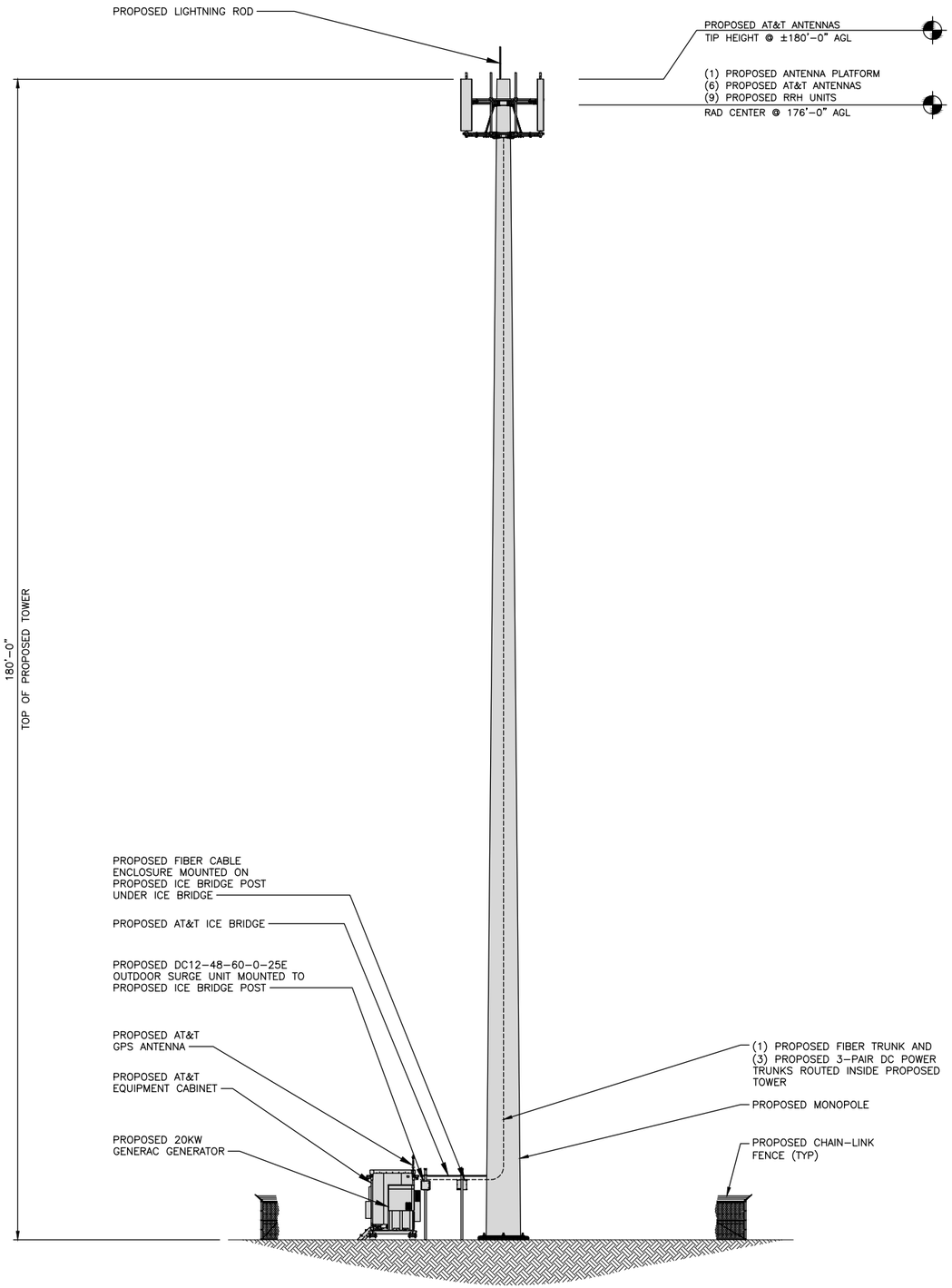

PROPOSED TOWER (NORTH) ELEVATION

12' 8' 4' 0 10' 20'
3/32"=1'-0"

1

THIS IS NOT AN ALL INCLUSIVE LIST. CONTRACTOR SHALL UTILIZE SPECIFIED EQUIPMENT PART OR ENGINEER APPROVED EQUIVALENT. CONTRACTOR SHALL VERIFY ALL NEEDED EQUIPMENT TO PROVIDE A FUNCTIONAL SITE.

THE PROJECT GENERALLY CONSISTS OF THE FOLLOWING:

PROPOSED-TOWER:
INSTALL (1) SABRE C10855721C MONOPOLE PLATFORM (OR ENGINEER APPROVED EQUAL)
INSTALL (3) KMW EPBQ-654L8H8-B ANTENNAS
INSTALL (3) KMW EPBQ-654L8H8-L2 ANTENNAS
INSTALL (9) AIRSCALE LTE RRH UNITS
INSTALL (1) RAYCAP DC9-48-60-24-8C-EV SURGE UNIT
INSTALL (3) DC POWER TRUNKS
INSTALL (1) FIBER TRUNK

PROPOSED-PLATFORM:
INSTALL (1) VERTIV XTE 801 CABINET, W/EQUIPMENT (NEQ200060)
INSTALL (1) GPS KIT
INSTALL (1) 20KW GENERAC GENERATOR WITH PLATFORM

PROPOSED-SITE:
INSTALL (1) ROSENBERGER FB-15-ABOX FIBER ENCLOSURE
INSTALL (1) RAYCAP DC12-48-60-0-25E OUTDOOR SURGE
INSTALL APPROXIMATELY 11 LF OF ICE BRIDGE

AT&T TO VERIFY REQUIRED PLATFORM EQUIPMENT.

PROJECT DESCRIPTION

1. FENCE NOT ENTIRELY SHOWN FOR CLARITY.
2. WHEN STACKING CABLES 3 OR MORE DEEP, USE STACKABLE SNAP-INS, TALLEY PART NUMBER SSH-158-3 (OR ENGINEER APPROVED EQUAL)

NOTES

THE PASSING MOUNT ANALYSIS FOR THE PROPOSED PLATFORM WAS COMPLETED BY BLACK & VEATCH ON 05/29/2019. THE MOUNTING SYSTEM HAS SUFFICIENT CAPACITY FOR THE PROPOSED LOADING OBSERVED ON THESE CONSTRUCTION DRAWINGS.

MOUNT ANALYSIS NOTE

THE PROPOSED TOWER IS BEING DESIGNED BY OTHERS TO CARRY THE PROPOSED AND FUTURE ANTENNAS, CABLES, AND EQUIPMENT. THESE DRAWINGS HAVE BEEN CREATED BASED ON THE ASSUMPTION THAT THE TOWER HAS SUFFICIENT CAPACITY TO SUPPORT THE PROPOSED AND FUTURE LOADS.

IF REQUIRED, THE PROPOSED TOWER SHALL INCLUDE FAA LIGHTING PER THE REQUIREMENTS INDICATED BY AT&T AND THE FAA. THE TOP LIGHT SHALL BE INSTALLED SUCH THAT THE BASE OF THE LIGHT IS A MINIMUM OF 1'-0" ABOVE THE TOP OF THE HIGHEST ANTENNA AND/OR TOWER STEEL. LIGHTNING ROD TO BE INSTALLED BY OTHERS.

STRUCTURAL NOTE

AT&T MOBILITY

7900 XERXES AVE S
3RD FLOOR
BLOOMINGTON MN 55431

BLACK & VEATCH

BLACK & VEATCH CORPORATION
7760 FRANCE AVENUE SOUTH
SUITE 1200
BLOOMINGTON, MN 55435

PROJECT NO:	129041.4117
DRAWN BY:	JKR
CHECKED BY:	JAT

REV	DATE	DESCRIPTION
1	06/08/20	ISSUED FOR CONSTRUCTION
0	04/20/20	ISSUED FOR CONSTRUCTION

LICENSED PROFESSIONAL ENGINEER
ROBLEY A. EVANS
20209
IOWA
06/10/2020

IT IS A VIOLATION OF LAW FOR ANY PERSON, UNLESS THEY ARE ACTING UNDER THE DIRECTION OF A LICENSED PROFESSIONAL ENGINEER, TO ALTER THIS DOCUMENT.

VANDALIA & 72ND
IAL02116
6970 SE VANDALIA DR.
PLEASANT HILL, IA 50327
NSB-WIC

SHEET TITLE
TOWER ELEVATION

SHEET NUMBER
T-1

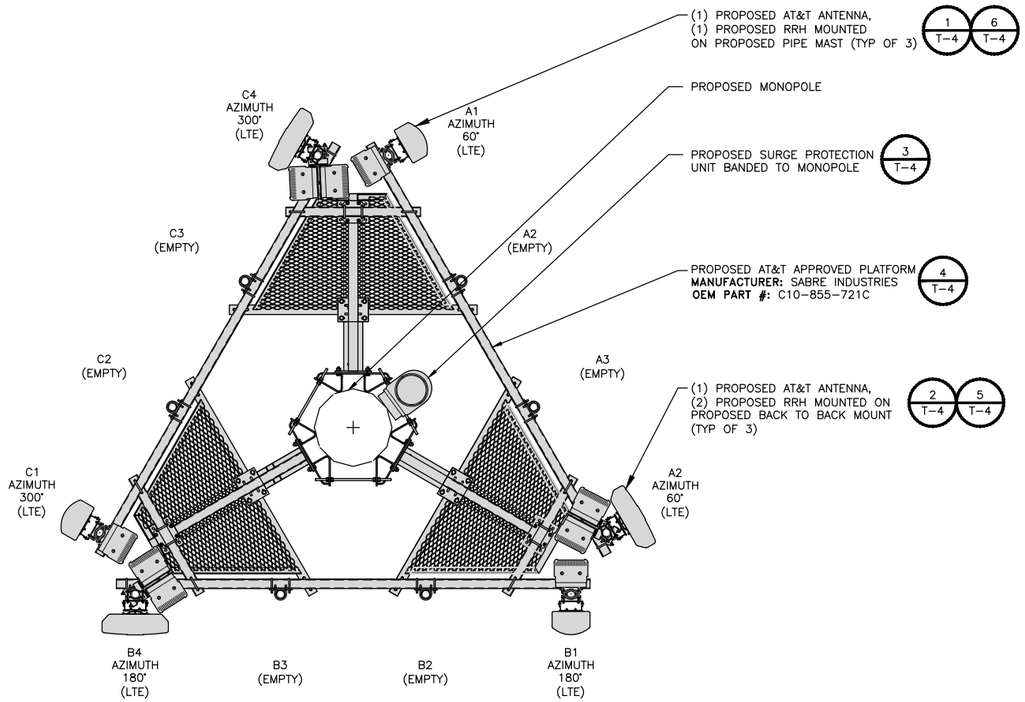

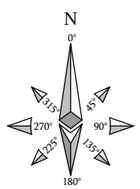

ANTENNA LAYOUT PLAN

12" 6" 0 1' 2' 3' 4' 5'
1/2"=1'-0"

1

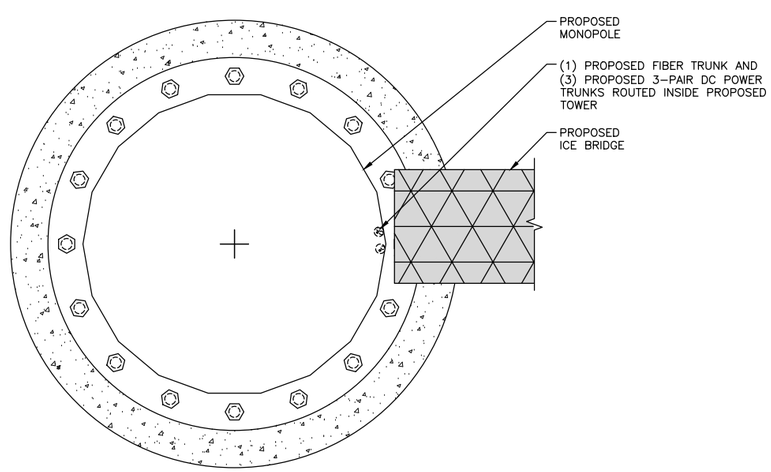

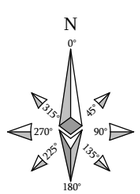

COAX ROUTING DIAGRAM

12" 6" 0 1' 2' 3'
3/4"=1'-0"

2

THE PASSING MOUNT ANALYSIS FOR THE PROPOSED PLATFORM WAS COMPLETED BY BLACK & VEATCH ON 05/29/2019. THE MOUNTING SYSTEM HAS SUFFICIENT CAPACITY FOR THE PROPOSED LOADING OBSERVED ON THESE CONSTRUCTION DRAWINGS.

MOUNT ANALYSIS NOTE

1. RAYCAP DC9-48-60-24-8C-EV SURGE SUPPRESSOR WILL ROUTE POWER AND FIBER TO EACH SECTORS TOWER MOUNTED RRHS.

NOTES

AT&T MOBILITY

7900 XERXES AVE S
3RD FLOOR
BLOOMINGTON MN 55431

BLACK & VEATCH

BLACK & VEATCH CORPORATION
7760 FRANCE AVENUE SOUTH
SUITE 1200
BLOOMINGTON, MN 55435

PROJECT NO:	129041.4117
DRAWN BY:	JKR
CHECKED BY:	JAT

REV	DATE	DESCRIPTION
1	06/08/20	ISSUED FOR CONSTRUCTION
0	04/20/20	ISSUED FOR CONSTRUCTION

LICENSED PROFESSIONAL ENGINEER
ROBLEY A. EVANS
20209
IOWA
06/10/2020

IT IS A VIOLATION OF LAW FOR ANY PERSON, UNLESS THEY ARE ACTING UNDER THE DIRECTION OF A LICENSED PROFESSIONAL ENGINEER, TO ALTER THIS DOCUMENT.

VANDALIA & 72ND
IAL02116
6970 SE VANDALIA DR.
PLEASANT HILL, IA 50327
NSB-WIC

SHEET TITLE

ANTENNA CONFIGURATION

SHEET NUMBER

T-2

FINAL ANTENNA AND TRANSMISSION EQUIPMENT REQUIREMENTS (VERIFY WITH LATEST RFDS)

SECTOR	RAD CENTER	POSITION	ANTENNA TILT		AZIMUTH	ANTENNA MODEL	TECHNOLOGY	RRH / TMA	SURGE & DISTRIBUTION	
			MECH	ELEC					MODEL	CABLE (QTY) TYPES
A	176'	1	–	–	60°	KMW EPBQ-654L8H8-B	LTE	AIRSCALE RRH 4T4R B30 100W AHNA	(1) RAYCAP DC9-48-60-24-8C-EV	(3) 3-PAIR DC POWER (1) 18-PAIR FIBER
		2	–	–	–	–	–	–		
		3	–	–	–	–	–	–		
		4	–	–	60°	KMW EPBQ-654L8H8-L2	LTE	AIRSCALE DUAL RRH 4T4R B12/14 320W AHLBA AIRSCALE DUAL RRH 4T4R B25/66 320W AHFIB		
B	176'	1	–	–	180°	KMW EPBQ-654L8H8-B	LTE	AIRSCALE RRH 4T4R B30 100W AHNA		
		2	–	–	–	–	–	–		
		3	–	–	–	–	–	–		
		4	–	–	180°	KMW EPBQ-654L8H8-L2	LTE	AIRSCALE DUAL RRH 4T4R B12/14 320W AHLBA AIRSCALE DUAL RRH 4T4R B25/66 320W AHFIB		
C	176'	1	–	–	300°	KMW EPBQ-654L8H8-L2	LTE	AIRSCALE RRH 4T4R B30 100W AHNA		
		2	–	–	–	–	–	–		
		3	–	–	–	–	–	–		
		4	–	–	300°	KMW EPBQ-654L8H8-L2	LTE	AIRSCALE DUAL RRH 4T4R B12/14 320W AHLBA AIRSCALE DUAL RRH 4T4R B25/66 320W AHFIB		

1. CONTRACTOR IS TO REFER TO AT&T'S MOST CURRENT RADIO FREQUENCY DATA SHEET (RFDS) PRIOR TO CONSTRUCTION.
2. CONTRACTOR TO USE ROSENBERGER FIBER LINE HANGER COMPONENTS (OR ENGINEER APPROVED EQUAL).

NOTES

ANTENNA AND RRH REQUIREMENTS

AT&T MOBILITY

7900 XERXES AVE S
3RD FLOOR
BLOOMINGTON MN 55431

BLACK & VEATCH

BLACK & VEATCH CORPORATION
7760 FRANCE AVENUE SOUTH
SUITE 1200
BLOOMINGTON, MN 55435

PROJECT NO:	129041.4117
DRAWN BY:	JKR
CHECKED BY:	JAT

REV	DATE	DESCRIPTION
1	06/08/20	ISSUED FOR CONSTRUCTION
0	04/20/20	ISSUED FOR CONSTRUCTION

LICENSED PROFESSIONAL ENGINEER
ROBLEY A. EVANS
20209
IOWA
06/10/2020

IT IS A VIOLATION OF LAW FOR ANY PERSON, UNLESS THEY ARE ACTING UNDER THE DIRECTION OF A LICENSED PROFESSIONAL ENGINEER, TO ALTER THIS DOCUMENT.

VANDALIA & 72ND
IAL02116
6970 SE VANDALIA DR.
PLEASANT HILL, IA 50327
NSB-WIC

SHEET TITLE
ANTENNA AND RRH REQUIREMENTS

SHEET NUMBER
T-3

KMW EPBQ-654L8H8-B

RADOME MATERIAL:	ASA
RADOME COLOR:	LIGHT GRAY
DIMENSIONS, HxWxD.in(mm):	96.0"x12.0"x7.4" (2438x305x189mm)
WEIGHT:	71.2 lbs (32.3 kg)
CONNECTOR:	(12) 4.3-10 DIN FEMALE

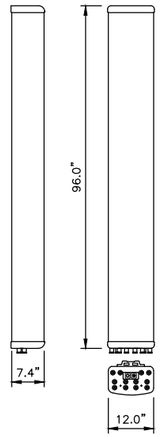

ANTENNA SPECIFICATIONS | NO SCALE | 1

KMW EPBQ-654L8H8-L2

RADOME MATERIAL:	ASA
RADOME COLOR:	LIGHT GRAY
DIMENSIONS, HxWxD.in(mm):	96.0"x21.0"x6.3" (2438x533x160mm)
WEIGHT:	86.0 lbs (39.0 kg)
CONNECTOR:	(12) 4.3-10 DIN FEMALE LONG NECK

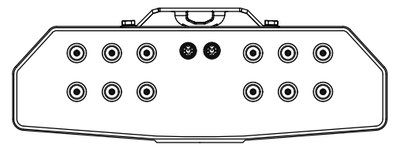

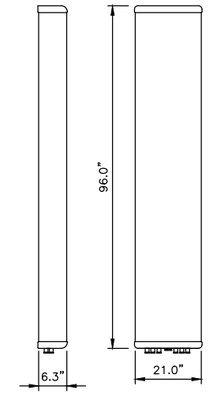

ANTENNA SPECIFICATIONS | NO SCALE | 2

RAYCAP DC9-48-60-24-8C-EV

DIMENSIONS, WxDxH:	260x464x798mm (10.24"x18.28"x31.41")
NOMINAL OPERATING VOLTAGE:	-48 VDC
NOMINAL DISCHARGE CURRENT:	20 kA 8/20µs
MAXIMUM IMPULSE CURRENT:	12.5 kA 10/350µs
MAXIMUM CONTINUOUS OPERATING VOLTAGE:	60 VDC
VOLTAGE PROTECTION RATING:	330 V
WIND LOADING:	150 MPH SUSTAINED (105.7 lbs) 195 MPH GUST (213.6 lbs)
TOTAL WEIGHT:	26.2 lbs

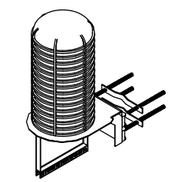

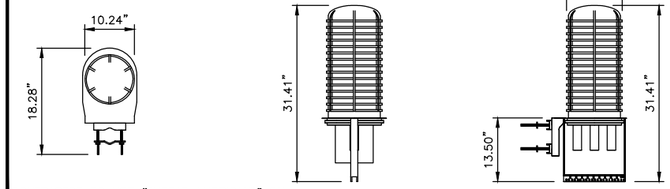

CONTRACTOR TO USE "THREAD LUBRICANT" ON MOUNTING BOLTS DURING INSTALLATION

SURGE PROTECTION SPECIFICATIONS | NO SCALE | 3

MANUFACTURER PART NO.	DESCRIPTION	WEIGHT (lbs)
SABRE C10-855-721C	12'-0" HD TENSION PLATFORM W/(12) 2-7/8" O.D. x 10'-0" MTG PIPES	2959

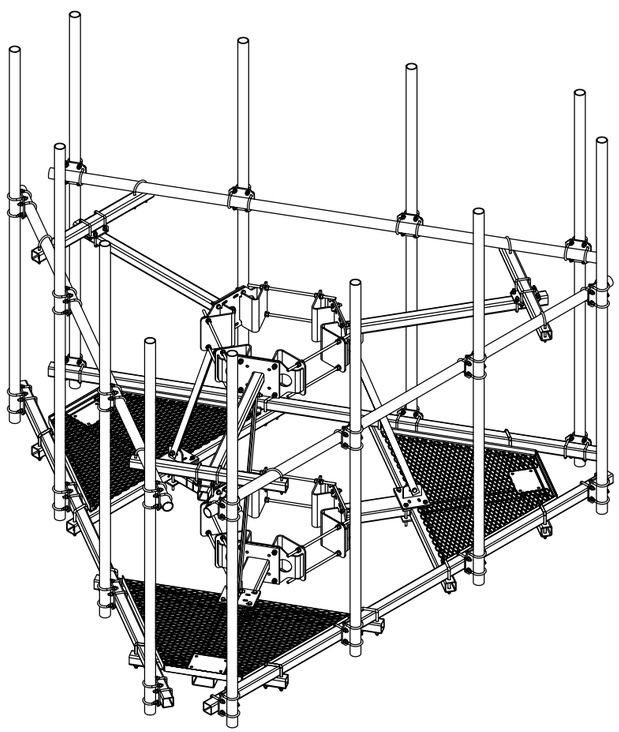

NOTES

1. THIS DETAIL IS INCLUDED FOR INFORMATIONAL PURPOSES ONLY. CONTRACTOR SHALL REFER TO MANUFACTURER DETAILS FOR SPECIFIC PART ORDERING AND INSTALLATION.

SABRE 12'-0" HD M.O.V.E. PLATFORM | NO SCALE | 4

ROSENBERGER D218RRUDSM

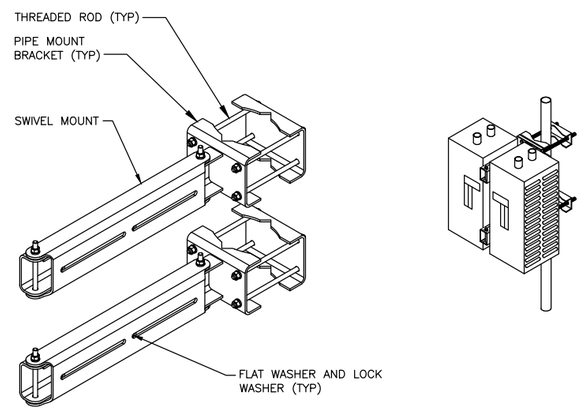

DUAL RRH MOUNTING DETAIL | NO SCALE | 5

NOTE:
ANTENNA NOT SHOWN FOR CLARITY

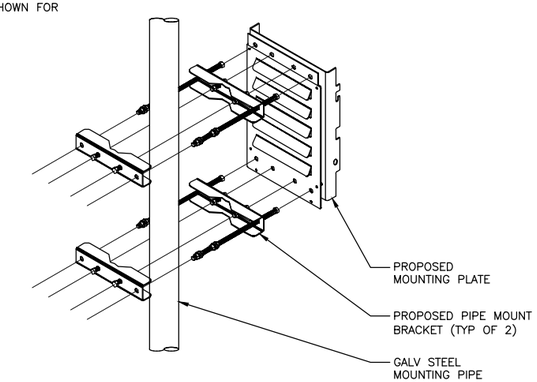

RRH MOUNTING PLATE DETAIL | NO SCALE | 6

NOT USED | NO SCALE | 7

NOT USED | NO SCALE | 8

AT&T MOBILITY

7900 XERXES AVE S
3RD FLOOR
BLOOMINGTON MN 55431

BLACK & VEATCH

BLACK & VEATCH CORPORATION
7760 FRANCE AVENUE SOUTH
SUITE 1200
BLOOMINGTON, MN 55435

PROJECT NO:	129041.4117
DRAWN BY:	JKR
CHECKED BY:	JAT

REV	DATE	DESCRIPTION
1	06/08/20	ISSUED FOR CONSTRUCTION
0	04/20/20	ISSUED FOR CONSTRUCTION

LICENSED PROFESSIONAL ENGINEER
ROBLEY A. EVANS
20209
IOWA
06/10/2020

IT IS A VIOLATION OF LAW FOR ANY PERSON, UNLESS THEY ARE ACTING UNDER THE DIRECTION OF A LICENSED PROFESSIONAL ENGINEER, TO ALTER THIS DOCUMENT.

VANDALIA & 72ND
IAL02116
6970 SE VANDALIA DR.
PLEASANT HILL, IA 50327
NSB-WIC

SHEET TITLE

TOWER EQUIPMENT DETAILS

SHEET NUMBER

T-4

Attachment C

Conditional Use Permit Application

Conditional Uses are those uses which may have a special impact or uniqueness demanding closer scrutiny and analysis to the site and the surrounding environment. When such a use is proposed, a review and report by Planning Division staff of the location, design, configuration, and impact will be conducted, comparing the proposed use to fixed standards and presented to the Board of Adjustment for action at a public hearing. Notices of the request are mailed to all property owners located within 500 feet of the subject property.

POLK COUNTY
Leading the Way

Please complete the entire application, submit with fee and review the standards on page 3.

To: **Polk County Board of Adjustment**

(time stamp)
Official Use Only

1. The undersigned Petitioners request that the Board consider this application for a Conditional Use Permit for the following use: (Describe briefly the nature of the use.)

Install a new 180' (192' with lightning rod) tall monopole communication tower. Install driveway, fencing and standard 6' x 6' walk-in-cabinet and generator on raised metal platform.

2. Subject Property Address: *2484 SE 68th St. Pleasant Hills, IA 50327*

3. Subject Property District and Parcel Number: *RR - 220/00265/002/000*

4. Subject Property Legal Description (attach if necessary):

Parcel "O" of the plat of survey filed September 13, 2001 and recorded in Book 8985 page 107, being a part of the Southeast Quarter (1/4) of the Northwest Quarter (1/4) of Section 14, Township 78 North, Range 23 West of the 5th P.M., Polk County, Iowa.

5. Filing Fee: - $407.00

6. Applicant(s) Information:

Curt Walter on behalf of AT&T — Applicant (Print Name)

Curt Walter for AT+T — Signature

6/1/20 — Date

Leasehold — Interest in Property (owner, renter, perspective buyer, etc.)

curtis.walter@powderriverdev.com — Email

2897 Lake Vista Dr NW Rochester, MN 55901 — Address, City, State and Zip

507-951-7151 — Phone

Fax

7. Applicant(s) Representative:
If the appeal is going to be represented by someone other than the applicant please provide that information below.

Curt Walter — Applicant Representative (Print Name)

Powder River Development for AT+T — Firm or Business Name

2897 Lake Vista Dr. NW Rochester, MN 55901 — Address, City, State and Zip

Curtis.Walter@powderriverdev.com — Email

507-951-7151 — Phone

none — Fax

8. Property Owner Consent:
The application must be signed by all the Titleholders, Contract Purchasers, or Option Purchasers of the subject property. The application may also be signed by the Registered Agent for a corporation or other person with similar legal authority to sign for a property owner. (if additional signatures are needed please attach)

Dennis P Ratashak — (Print Name)

WHCC Representative

Signature

4/30/20 — Date

Curt Walter (Leasehold) — (Print Name)

Curt Walter for AT+T — Signature

6/1/20 — Date

9. Written description:

Please provide a written description providing specific detail and reasons for the proposed Conditional Use Permit. (attach if necessary)

See attached narrative + information package.

10. Required Information: (must be included prior to making submittal)

A. Complete Application including the detailed description of requested Conditional Use Permit, including specific information about the request.

B. Submit six (6) copies of a fully dimensioned, to scale site plan meeting site plan requirements, as required.

1. Provide additional information as required by Zoning Ordinance specific to the use requested.
2. Submit a reduced size, 11"X17" site plan that is legible that can be reproduced.

A completed application with required information and filing fee must be submitted. Incomplete submittals will not be processed and will be returned to the Applicant.

Return forms to: Polk County Public Works, Planning & Development Division 5885 NE 14th Street
Des Moines, IA 50313
▪ Phone (515) 286-3705 ▪ Fax (515) 286-3437 ▪
Forms and calendar available online http://www.polkcountyiowa.gov/PublicWorks/

OFFICIAL USE ONLY			
Received by		Docket Number	
Application deadline		Date Received	
BOA meeting date		BOA Approved	Y / N

Conditional Use Permit Standards

Section 1. Review Standards

The review determines whether the proposed use should be permitted by weighing public need for and benefits to be derived from the use against the local impact which it may cause. The review shall consider the proposal in terms of:

(A) Existing zoning and land use in the vicinity of the use; and

(B) planned and proposed public and private developments which may be adversely affected by the proposed use; and

(C) whether and to what extent the proposed use, at the particular location for which it is suggested, is necessary or desirable to provide a development which is in the interest of the public or which will contribute to the general welfare of the area or Polk County; and

(D) whether and to what extent all steps possible have been taken by the developer to minimize any adverse effects of the proposed use on the immediate vicinity and on the public health, safety and welfare in general.

Section 2. General Standards

No application for a conditional use permit shall be approved unless the Board of Adjustment specifically finds the proposed conditional use appropriate in the location for which it is proposed. This finding shall be based on the following criteria:

The proposed use shall be in harmony with the general purpose, goals, objectives, and standards of the Polk County Comprehensive Plan, this Ordinance, or any other plan, program, map, or ordinance adopted, or under consideration pursuant to official notice, by the County.

(A) The proposed location and use shall be consistent with policies or provisions of the Comprehensive Plan, this Ordinance, or other plans or programs of the County.

(B) The proposed use at the proposed location shall not result in a substantial or undue adverse effect on adjacent property, the character of the neighborhood, traffic conditions, parking, public improvements, public sites or rights-of-way, or other matters affecting the public health, safety, and general welfare, either as they now exist or as they may in the future be developed as a result of the implementation of provisions and policies of the Comprehensive Plan, this Ordinance, or any other plan, program, map, or ordinance adopted, or under consideration pursuant to official notice, by the County or other governmental agency having jurisdiction to guide growth and development.

(C) The proposed use in the proposed area will be adequately served by, and will not impose an undue burden on, any public improvements, facilities, utilities, and services. Where any such improvements, facilities, utilities, or services are not available or adequate to service the proposed use in the proposed location, the applicant shall, as part of the application and a condition to approval of the proposed conditional use permit, be responsible for establishing ability, willingness, and binding commitment to provide such improvements, facilities, utilities, and services in sufficient time, and in a manner consistent with the Comprehensive Plan, this Ordinance, and other plans, programs, maps, and ordinances adopted by Polk County to service the development. The approval of the conditional use permit shall be conditioned upon such improvements, facilities, utilities, and services being provided and guaranteed by the applicant.

May 28, 2020

The following is a brief explanation of why AT&T Mobility is proposing a new wireless communication facility at 2484 SE 68th Street, Pleasant Hills, IA 50327.

This site will provide continuous coverage for the first responders as part of the national FNET network. Provide coverage for Pleasant Hill area, Woodland Community Church, surrounding residential and commercial area. Provide connectivity coverage from commuters from Des Moines through Vandalia.

Customers in the immediate area are experiencing a coverage gap during our systems busiest times. Connectivity is always essential to our customers – doctors and nurses, first responders, governments, banks, grocery stores, pharmacies and others delivering vital services. It's even more critical during a public health crisis that is challenging everyone. In fact, as a critical infrastructure provider, AT&T believes we have a civic duty to step up and keep our customers and communities connected. The proposed location in Pleasant Hills is additionally proposed to be part of the FirstNet network. The FirstNet build is being carried out with direct feedback from state and public safety officials to ensure network coverage for first responders.

To broadcast technology needed in this area, we need to construct a new wireless communication facility, which will include a 180' monopole. As data communication becomes more prevalent, our customers are demanding faster wireless data rates. In order to deliver these rates, we need to construct a new facility which will provide broader coverage within the Pleasant Hills area.

This proposed location was chosen due to coverage capabilities and the surrounding area. The monopole is being proposed in the back of the property and over 900' from the road. It is completely surrounded by existing trees and more than 800' from the nearest residence.

The existing Verizon Wireless tower, located at 1100 SE 68th Street, is approximately 1 mile north of the proposed AT&T installation and is the only existing tower structure, not owned by AT&T, within 2 ¼ miles. The Verizon Wireless tower will not meet AT&T's coverage objective through collocation as it is outside of the coverage gap that is proposed to be bridged. The Verizon Wireless tower location already has coverage by means of the AT&T facility located at Hwy 65 and E Oakwood Dr.

As seen in map 1 below AT&T Mobility will have sufficient coverage cellular coverage in the surrounding area once the proposed wireless communication facility has been constructed. The green indicates solid coverage where phones should be able to perform at acceptable levels in most buildings. The yellow indicates that a AT&T mobile device should perform at acceptable levels in vehicles. The red indicates that a AT&T mobile device should perform at acceptable levels on-street. Areas with no color (no coverage) are lacking coverage and thus no-service. Map 2 shows existing coverage without the proposed site.

Imad Assaad

Radio Frequency Design Engineer

AT&T Mobility Division

Map 1 AT&T coverage with discussed site (Vandalia & 72nd)

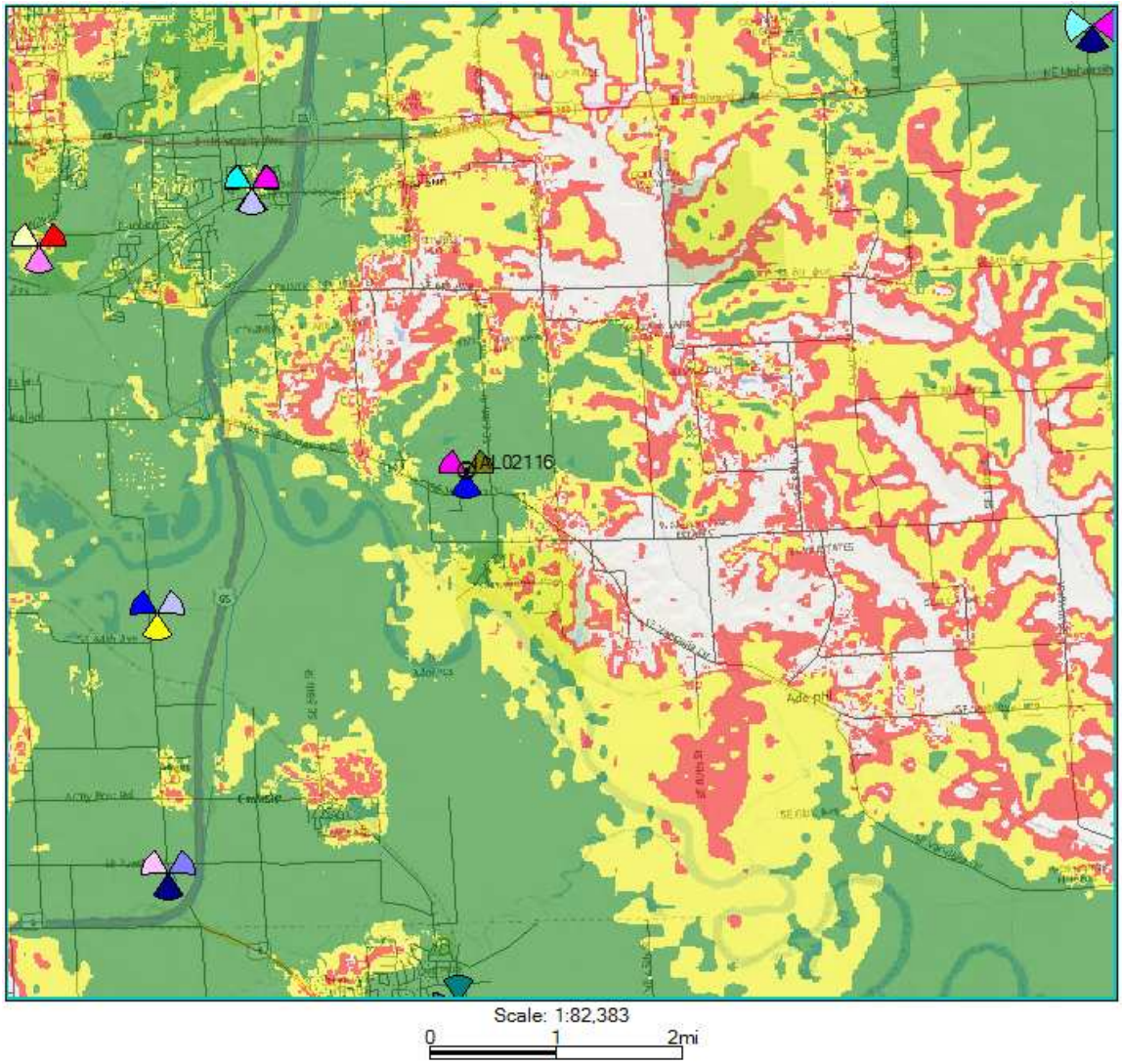

Map 2 AT&T coverage without discussed site (Vandalia & 72nd)

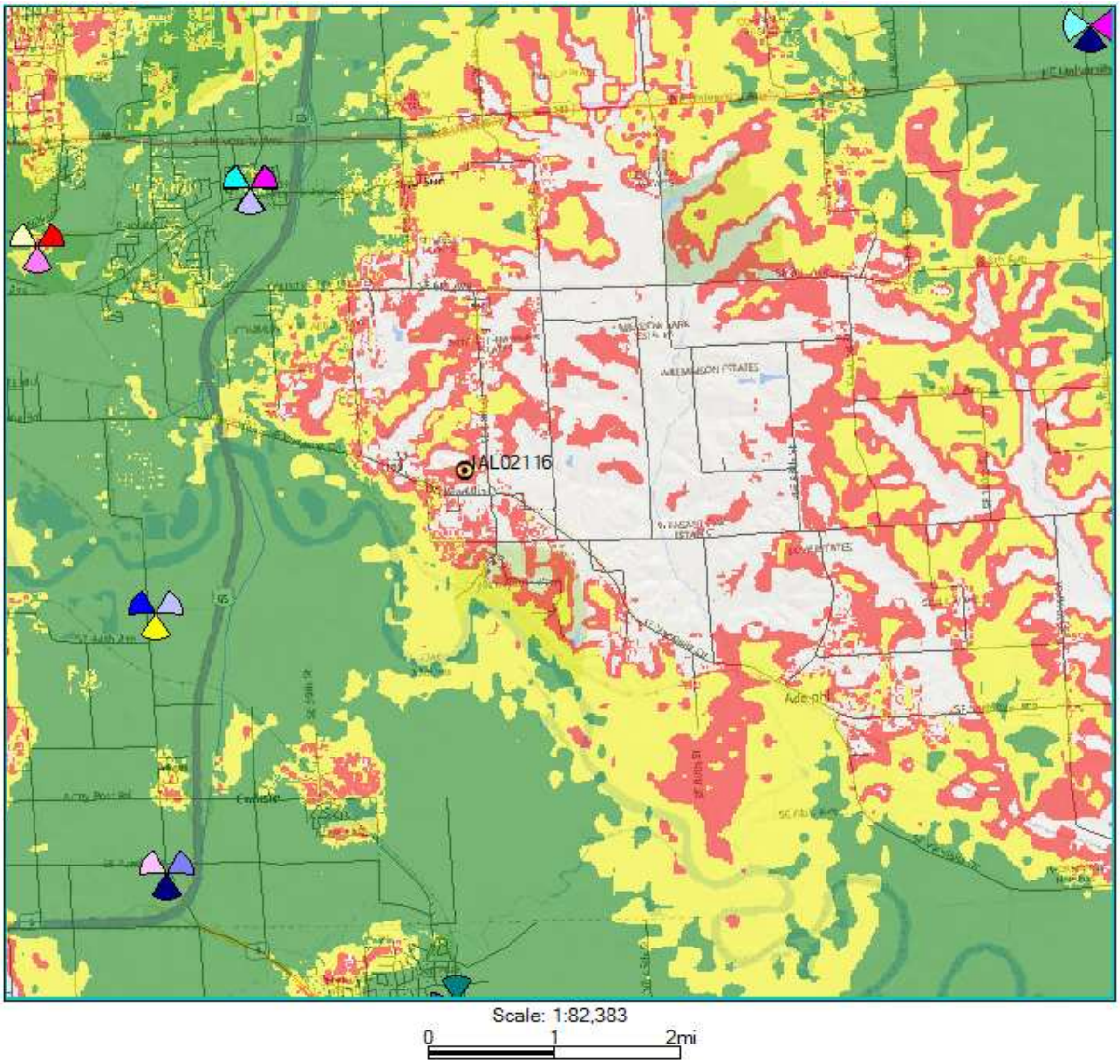

Powder River Development Services, LLC
2897 Lake Vista Drive NW
Rochester, MN 55901
(507) 951-7151 office
(952) 314-4957 fax
www.powderriverdev.com
Curtis.walter@powderriverdev.com

June 9, 2020

Bret VandeLune
Planning and Development Manager
Polk County Public Works
5885 NE 14th Street
Des Moines, IA 50313

Re: AT&T Conditional Use Permit application for communications facility at 2484 SE 68th Street, Pleasant Hill, IA.

Bret,

AT&T Mobility would like to construct a telecommunications facility located on a property they will be leasing from Woodland Hills Church of Christ, located at 2484 SE 68th Street, Pleasant Hill, Polk County, Iowa. (Parcel ID #220/00265/002/000).

This facility is needed to help with wireless coverage and capacity in the area, and will also be used in the FirstNet First Responders system. FirstNet is an independent authority within the U.S. Department of Commerce. Authorized by Congress in 2012, its mission is to develop, build and operate the nationwide, broadband network that equips first responders to save lives and protect U.S. communities.

AT&T would like to install a 180' tall monopole tower, along with the ground equipment and fencing. We would use the existing access from 68th Street lot and then extend a new driveway from the NW corner of the parking lot to our proposed tower location. The tower is located 55' from the west property line and more than 180' from all others. We have submitted an engineering letter that describes the "Fall Zone Radius" of 55' or less.

This proposed location was chosen due to coverage capabilities and the surrounding area. The monopole is being proposed in the back of the property and over 900' from the road. It is completely surrounded by existing trees from all public locations and is more than 800' from the nearest residence.

There is an existing monopole 0.97 miles north of this location. We have submitted a statement from a Radio Frequency Engineer that explains why this location is needed and why the existing tower is not viable.

The tower design and construction drawings are signed by a registered engineer.

Enclosed with this narrative are the following documents:

- Information package with photo simulation of tower view;
- Completed CUP application;
- Engineering "Fall Zone Radius" statement;
- Radio Frequency Engineering statement with coverage maps;

- Check for $407 for CUP fee;
- (6) copies of site plan;
- 11” x 17” site plan;

Please accept this information and application papers and place us on the next available agenda. Feel free to contact me for any additional information required.

Cordially,

Curt Walter

Curt Walter
On behalf of AT&T Mobility

On behalf of AT&T Mobility

Zoning Permit Proposal

for

Polk County

Des Moines, Iowa

Prepared by

Curt Walter

POWDER RIVER
Development Services, LLC

June 9, 2020

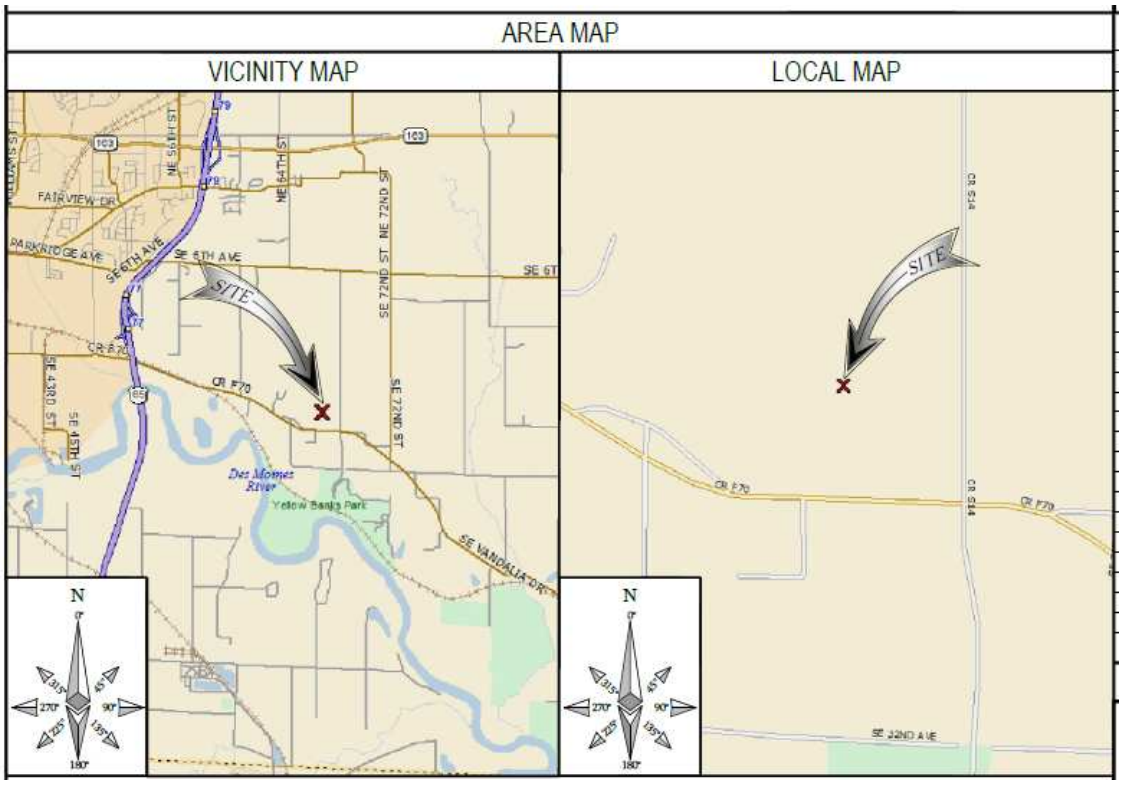
AREA MAP
VICINITY MAP
LOCAL MAP
SITE
SITE
FAIRVIEW DR
PARKRIDGE AVE
SE 6TH AVE
SE 5TH AVE
SE 72ND ST
NE 72ND ST
NE 64TH ST
NE 56TH ST
CR F70
SE 43RD ST
SE 45TH ST
Des Moines River
Yellow Banks Park
SE VANDALIA DR
CR F14
CR E44
SE 32ND AVE
N

Site Plan

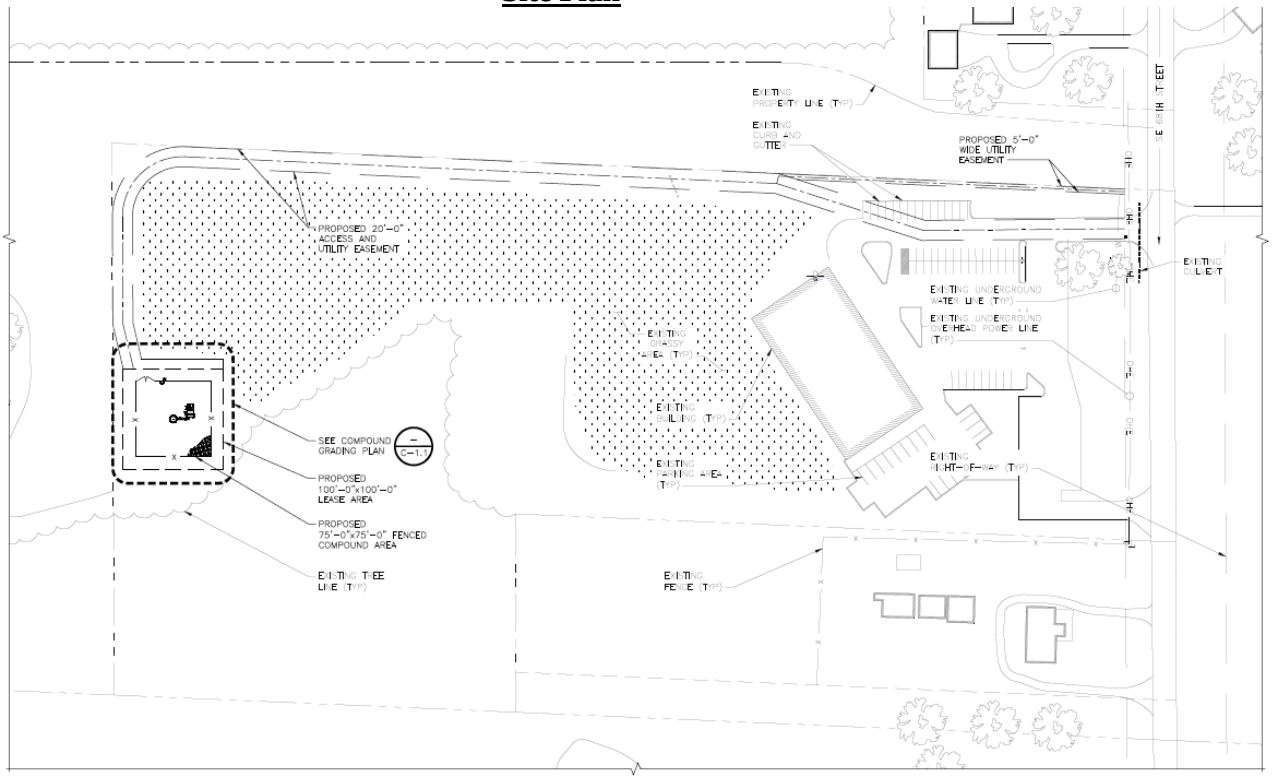
PROPOSED 20'-0" ACCESS AND UTILITY EASEMENT
PROPOSED 5'-0" WIDE UTILITY EASEMENT
SEE COMPOUND GRADING PLAN
PROPOSED 100'-0"x100'-0" LEASE AREA
PROPOSED 75'-0"x75'-0" FENCED COMPOUND AREA
EXISTING TREE LINE (TYP)
EXISTING FENCE (TYP)
EXISTING CULVERT

Tower elevation sketch

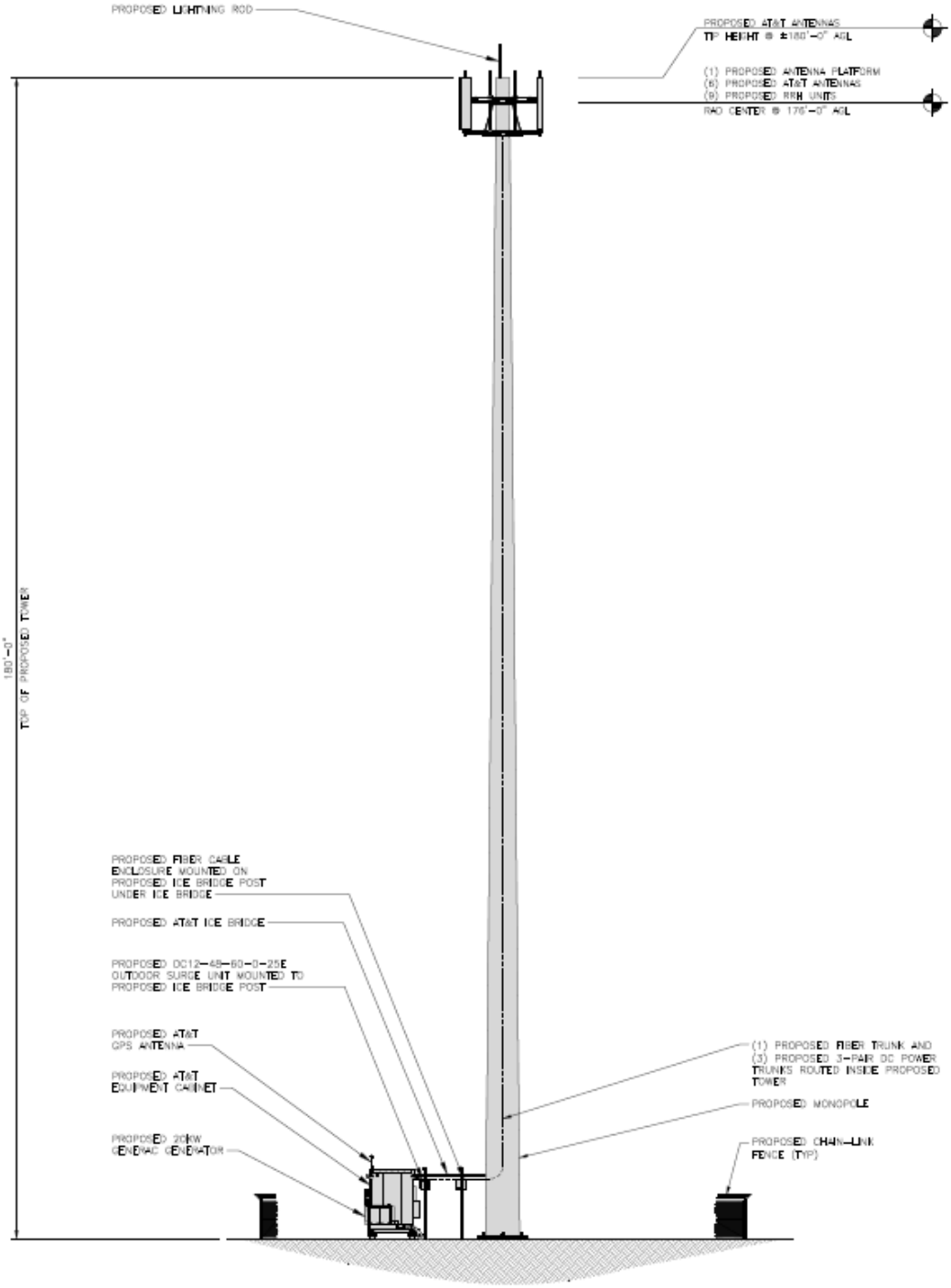

SIMILAR FACILITIES

Typical 180’ tall monopole tower

View of tower from public road (68th Street)

AT&T is honored to work with FirstNet to build, deploy and maintain the first-ever nationwide public safety broadband network for America's first responders. This opportunity aligns with our nearly 140-year history of serving the U.S. federal government and the public safety community. We're committed to helping deliver the next generation of highly secure, reliable, and innovative mobile broadband communications to first responders through the FirstNet network.

Why FirstNet?

FirstNet's public safety mission is to create a nationwide broadband network for America's public safety community. The FirstNet network will strengthen and modernize public safety's communications capabilities, enabling them to coordinate and respond more quickly and effectively in accidents, disasters, and emergencies. It will provide first responders like law enforcement, fire, and emergency medical personnel with access to new technologies and increased capacity and reliability for their mobile communications and data needs.

The purpose of the FirstNet network is to help unify and improve communications across the U.S. public safety community – including all 50 states, 5 U.S. territories, and the District of Columbia, as well as rural communities and tribal lands in those states and territories – to help keep America and the first responders who protect our country safe. First responders across the country currently rely on more than 10,000 separate radio networks which often times do not interoperate with one another. By deploying a nationwide broadband public safety network built specifically to meet the communications needs of first responders, the FirstNet network will provide a solution to the decades-long interoperability and communications challenges first responders have experienced.

The FirstNet network will support next generation technologies that can enable a faster flow of information, allowing millions of first responders to make better decisions more quickly. This will help make our communities and first responders safer.

Why AT&T for FirstNet?

AT&T is uniquely qualified and capable to deliver FirstNet's public safety mission. We've been helping to enable public safety communications for nearly 140 years, allowing our public safety agencies and first responders to focus on what matters most – protecting communities and saving lives.

AT&T is well positioned to deliver the value and experience our first responders expect, and we're committed to building and maintaining the first-ever nationwide public safety broadband network.

For more information on FirstNet, please visit http://www.FirstNet.com.

Delivering on the FirstNet promise

All 50 states, five U.S. territories and Washington, D.C., have "opted in," to FirstNet, meaning each has accepted its individual State Plan detailing how the network will be deployed in their state/territory. The First Responder Network Authority's public-private partnership with AT&T provides first responders with immediate access to mission-critical capabilities over the FirstNet network. This includes priority and preemption features that give first responders their own "fast lane" on the public safety network to communicate and share information during emergencies, large events, or other situations when commercial networks could become congested. Key activities include:

- Building out the network: The First Responder Network Authority has issued work orders to deploy the RAN. This gave AT&T the green light to expand FirstNet's footprint and deploy Band 14 capacity and coverage throughout the nation, providing first responders with the bandwidth and mission critical connections they need to communicate, share information, and use innovative technologies every day and in every emergency.
- Driving public safety innovation: FirstNet is unlocking a new technology marketplace for public safety, enabling first responders to benefit from advancements in innovation. The FirstNet App Catalog is filling up with FirstNet-approved mobile apps that are optimized for public safety use over the network. At the same time, public safety has access to a growing selection of devices and accessories compatible with the network through the FirstNet Device Ecosystem. The First Responder Network Authority works through the National Institute of Standards and Technology to publish a list of certified devices for use on FirstNet, with more devices being added regularly.
- Securing emergency communications: FirstNet's first-of-its-kind core infrastructure will give first responders the dedicated, highly secure, non-commercial network they deserve. The FirstNet Core, delivered in March 2018, is working to provide full encryption of public safety data over FirstNet with the goal of end-to-end cyber security. FirstNet subscribers also have access to a dedicated Security Operations Center, offering 24/7/365 support.
- Engaging with public safety: The First Responder Network Authority will continue to engage with public safety in the states, territories, federal agencies, and tribal nations to ensure the network meets their needs and incorporate their feedback in the design of future FirstNet products and services.